Status Report (Q4 FY16 / Q1 FY17)

Fast and lightweight

EIC integrated tracking system

Barrel MicroMegas (MM)

&

Forward Triple - Gas Electron Multiplier (GEM)

Franck Sabatie (PI),
Maxence Vandenbroucke

Matt Posik,
Bernd Surrow (PI)

Outline

- Introduction
- Generic R&D program: Status
  - (1) Forward GEM tracking
  - (2) Barrel MM tracking
- Generic R&D program: Plans
  - (1) Forward GEM tracking
  - (2) Barrel MM tracking
- Plans for FY18 request: Complete Generic R&D
- R&D program for eRD3/6: Plans
- Summary

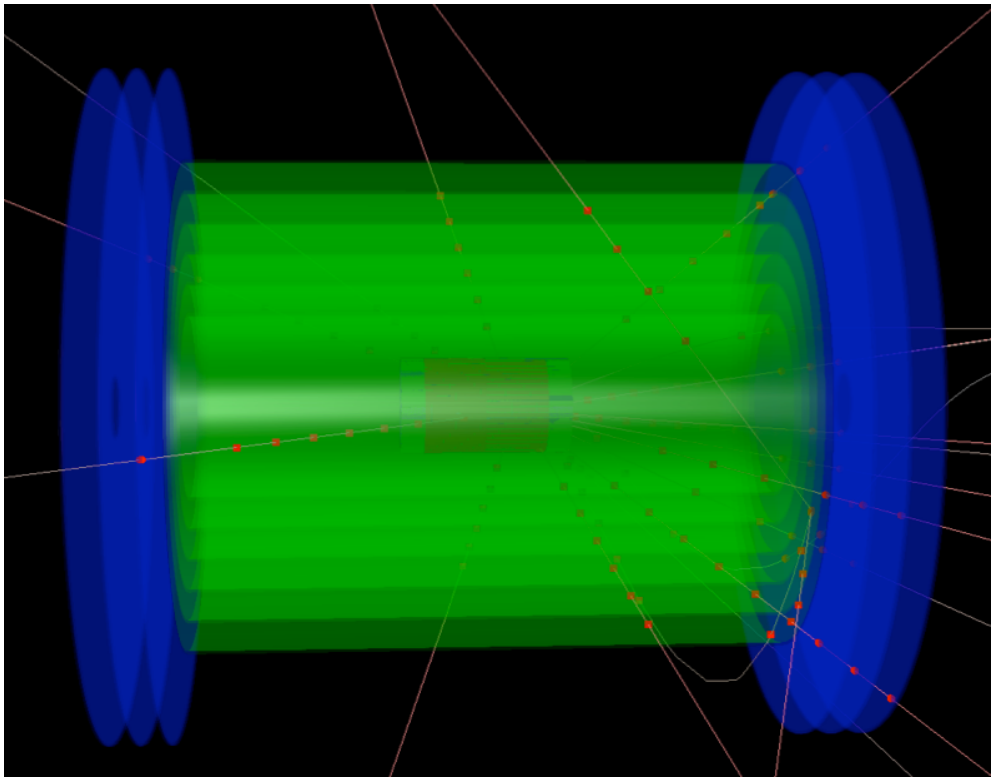

Matt Posik, Maxence Vandenbroucke, Bernd Surrow (PI) and Franck Sabatie (PI)

Introduction

- Overview of eRD3 effort
  - R&D effort focuses on intermediate tracking system:
    - Barrel tracking system based on MM detectors (Dedicated barrel / curved MM EIC R&D program) manufactured as cylindrical shell elements and
    - Rear / Forward tracking system based on triple-GEM detectors manufactured as planar segments (Collaboration with eRD6 FIT/UVA) - Merging efforts!
  - R&D effort - Main strategy:
    - Design and assembly of large cylindrical MM detector elements and large planar triple-GEM detectors
    - Test and characterization of MicroMegas and triple-GEM prototype detectors
    - Design and test of new, common chip readout system employing CLAS12 DREAM chip development
    - Utilization of light-weight materials
    - Development and commercial fabrication of various critical detector elements
    - Complete generic R&D phase (eRD3) and move to R&D phase in collaboration with eRD6

eRD3 Status Report

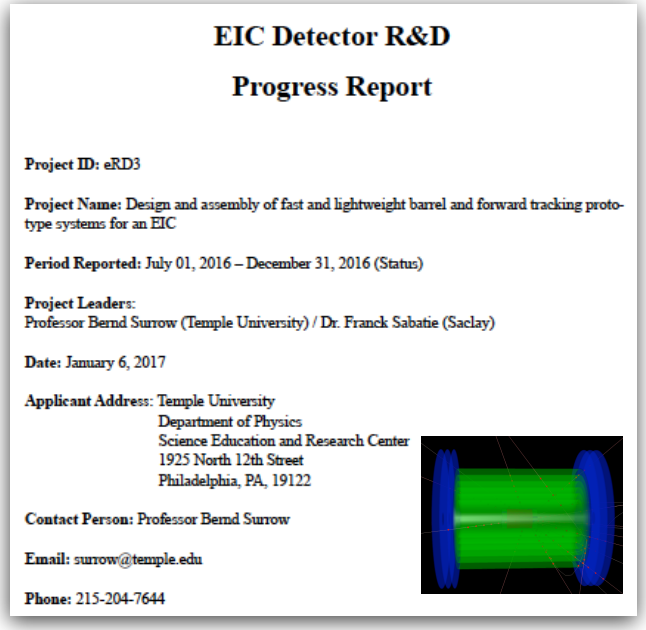

EIC Detector R&D

Progress Report

Project ID: eRD3

Project Name: Design and assembly of fast and lightweight barrel and forward tracking prototype systems for an EIC

Period Reported: July 01, 2016 – December 31, 2016 (Status)

Project Leaders:
Professor Bernd Surrow (Temple University) / Dr. Franck Sabatie (Saclay)

Date: January 6, 2017

Applicant Address: Temple University
Department of Physics
Science Education and Research Center
1925 North 12th Street
Philadelphia, PA, 19122

Contact Person: Professor Bernd Surrow

Email: surrow@temple.edu

Phone: 215-204-7644

Matt Posik, Maxence Vandenbroucke,
Bernd Surrow (PI) and Franck Sabatie (PI)

Introduction

- International MPGD 2017 Conference / RD51 Collaboration Meeting
  - MPGD2017 main focus:
    - Micropattern detector technology
    - Related detector technologies
    - Future applications at Nuclear and Particle Physics facilities
    - Application and commercial production
  - Local organizing committee: Member institutions: BNL / Florida Institute of Technology / Stony Brook University / Temple University / University of Virginia / Yale University
  - Date: Monday, May 22, 2017 - Friday, May 26, 2017
  - eRD3/6 programs are looking forward to host MPGD2017 ⇒ Strong recognition of EIC R&D program!

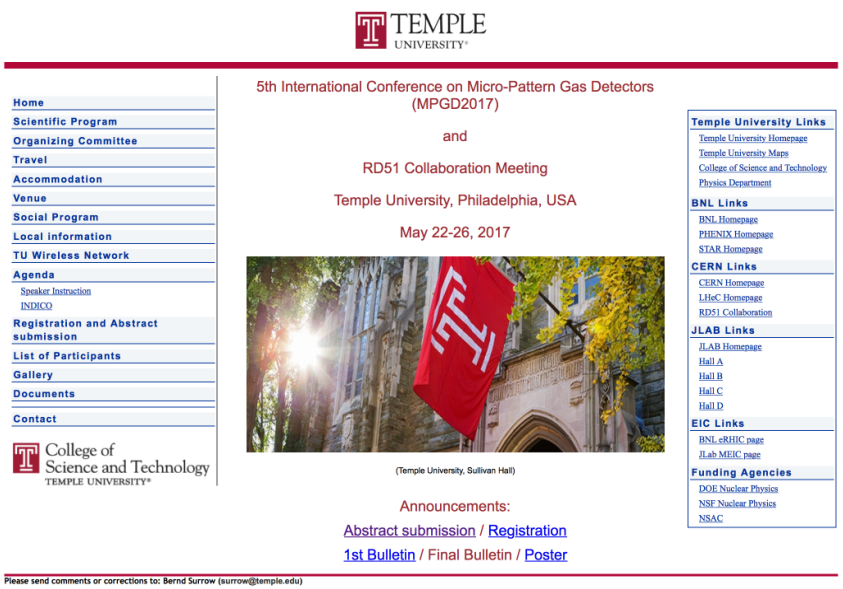

https://phys.cst.temple.edu/mpgd2017/

- Presented oral presentation at IEEE 2016
- Gave an invited talk on EIC GEM Tracker designs at China Hadron 2016 (eRD3/eRD6 efforts)
- Publications/Papers: 5

Introduction

- Highlights of triple-GEM R&D program
  - CCD scanner components all machined and assembled / Commissioning in progress
  - Kapton rings obtained - high quality / Test of various arrangements evaluated
  - All GEM detector components available and largely tested: Single-mask GEM foils, HV foils, 2D readout foils, frames, Kapton spacer rings and soldering of SAMTEC multi-pin connectors to 2D readout foils
  - All tooling available including new, large ultrasonic bath - fully operational
  - GEM component storage unit design completed - machining of components started
  - X-ray enclosure preliminary design available / Verification by TU safety group required / Quote of Pb-lined material available

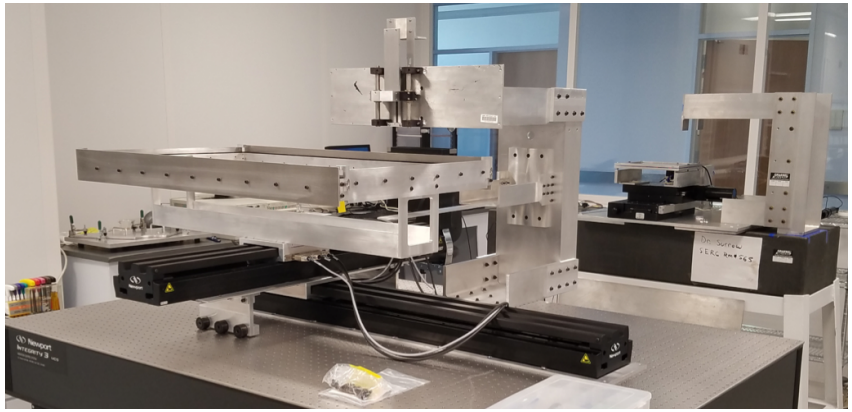

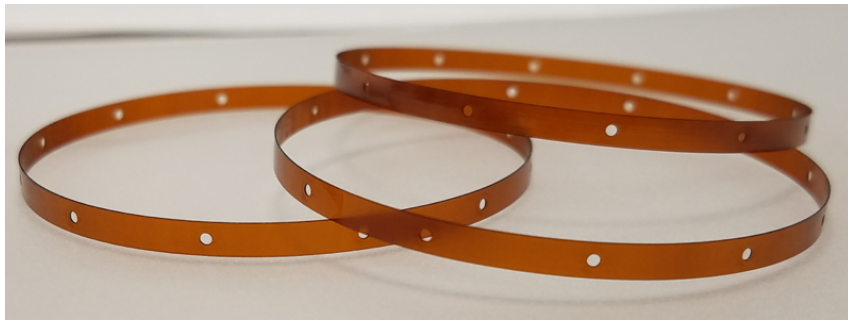

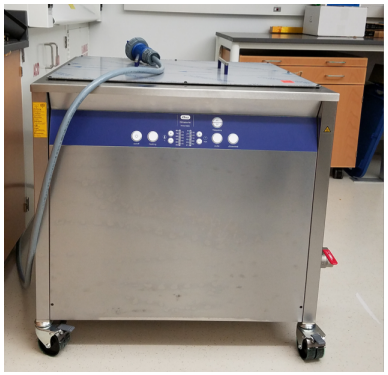

Matt Posik, Maxence Vandenbroucke,
Bernd Surrow (PI) and Franck Sabatie (PI)

Introduction

- Highlights of MM R&D program

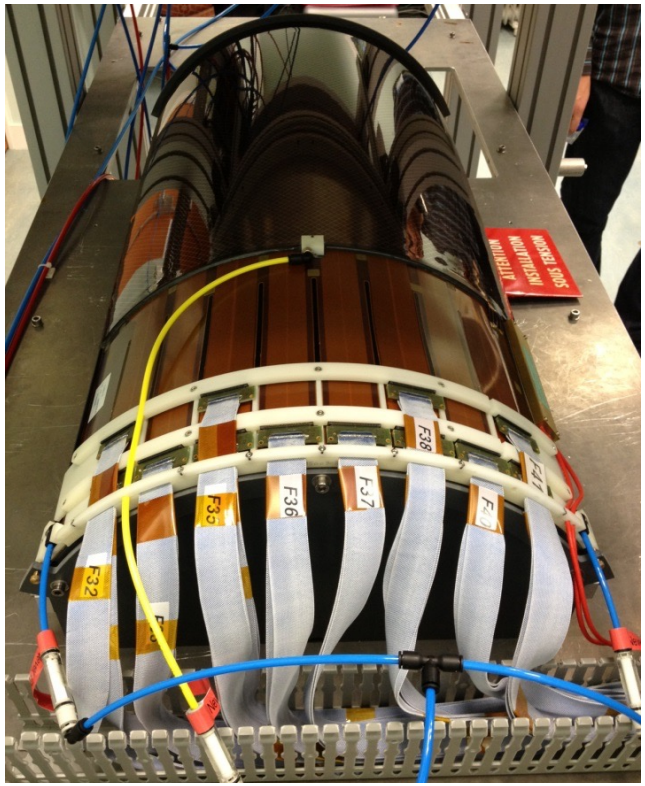

- Further testing of MM 1D prototype detectors and triple-GEM prototype detector with DREAM chip readout / Analysis of data of triple-GEM detector (Mapping as reported earlier!) requires help from new postdoc who was only hired in spring 2016 due to delay of FY16 funding
- Component list for DREAM-chip DAQ setup at Temple University available
- Modular DREAM chip development
- 2D MM design ongoing

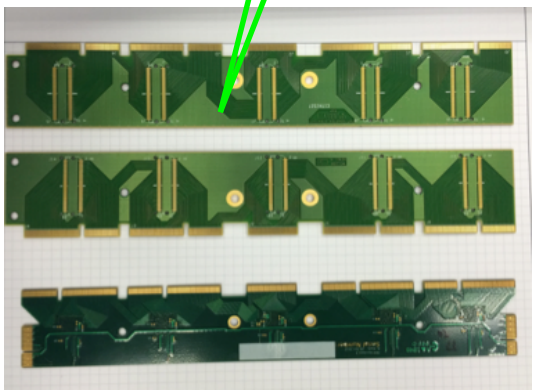

Matt Posik, Maxence Vandenbroucke,
Bernd Surrow (PI) and Franck Sabatie (PI)

Status - Forward GEM Tracking / Generic R&D

- GEM CCD Scanner

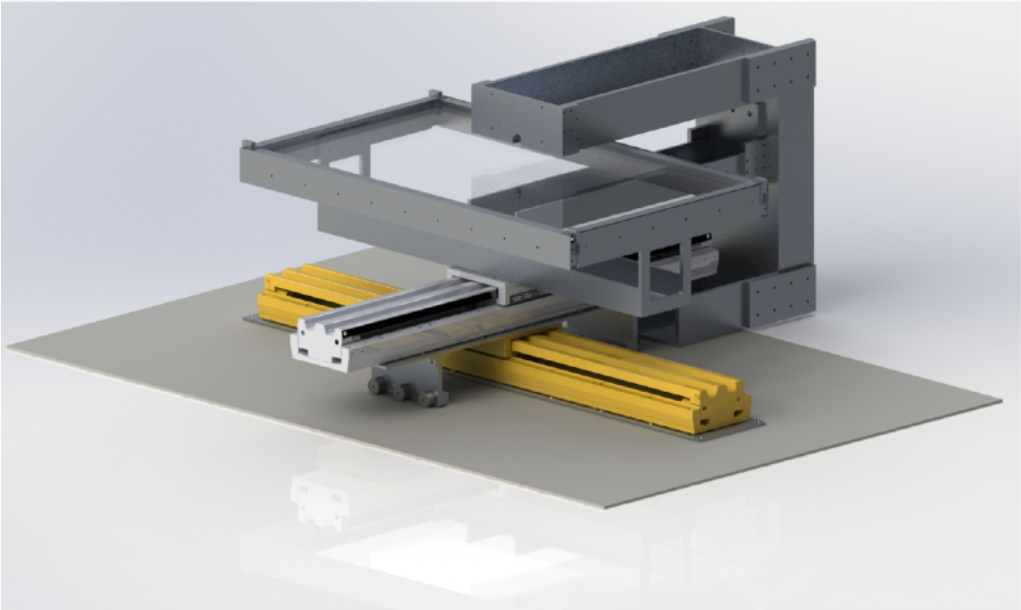

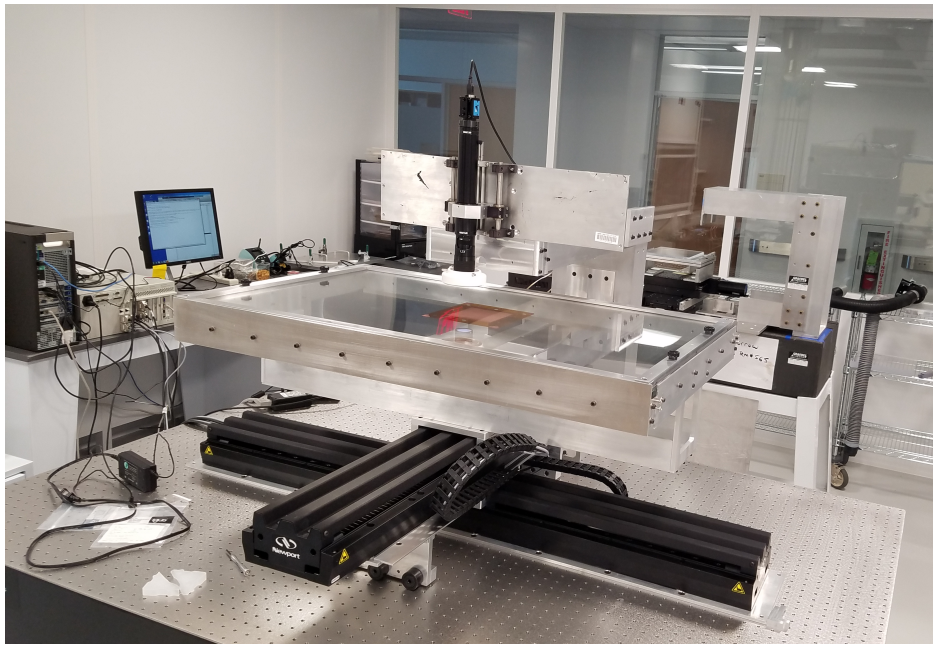

- CCD scanner components all machined and assembled / Commissioning in progress
- Design similar to prior setup based on glass sandwich support, top and bottom light with fixed new CCD camera under MatLab control
- Significant extension in size to allow scans of GEM foils of size of max. ~60cm / ~120cm
- Scan of existing foils and larger EIC / CMS foils planned

Matt Posik, Maxence Vandenbroucke,
Bernd Surrow (PI) and Franck Sabatie (PI)

Status - Forward GEM Tracking / Generic R&D

- Triple-GEM detector assembly 40cm X 40cm: Overview

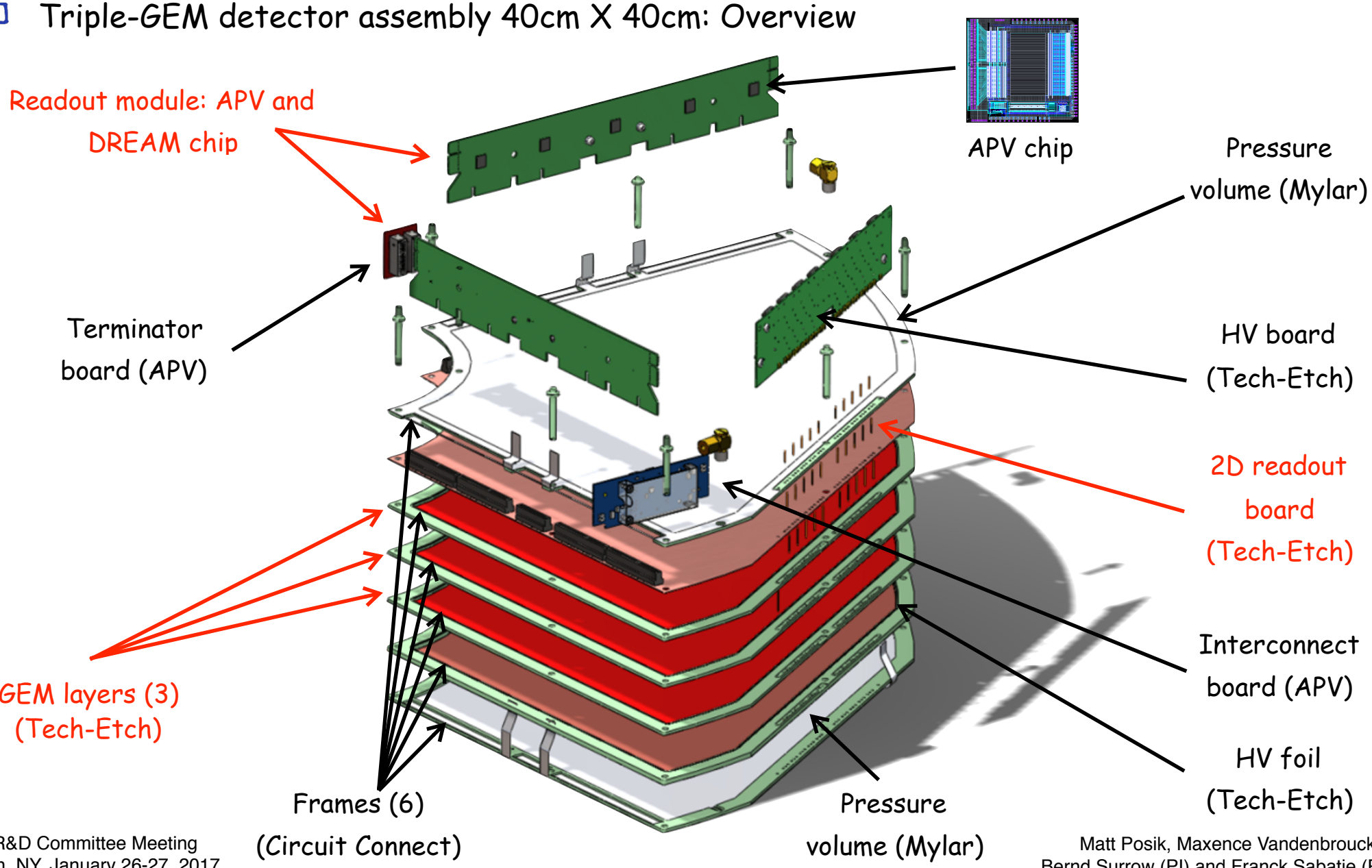

Matt Posik, Maxence Vandenbroucke,
Bernd Surrow (PI) and Franck Sabatie (PI)

Status - Forward GEM Tracking / Generic R&D

- Triple-GEM detector assembly 40cm X 40cm: Frames

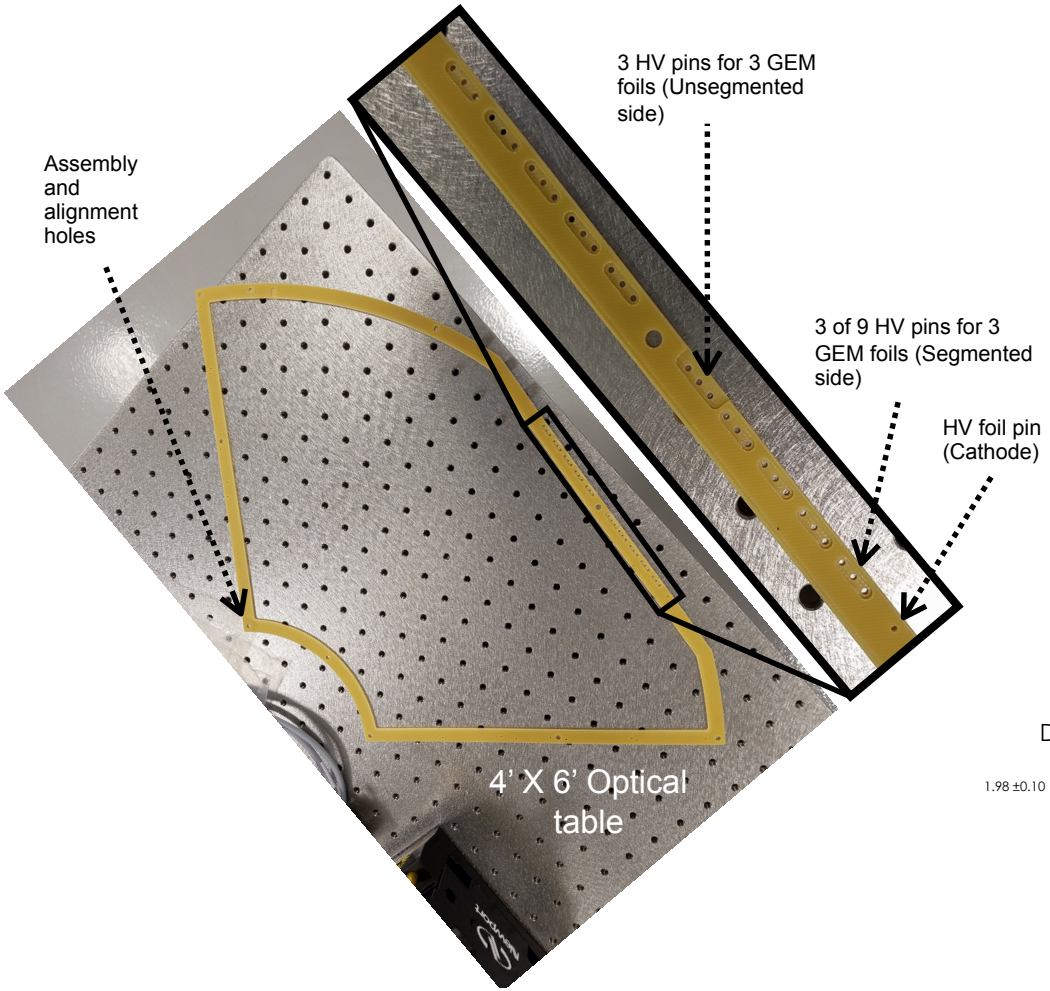

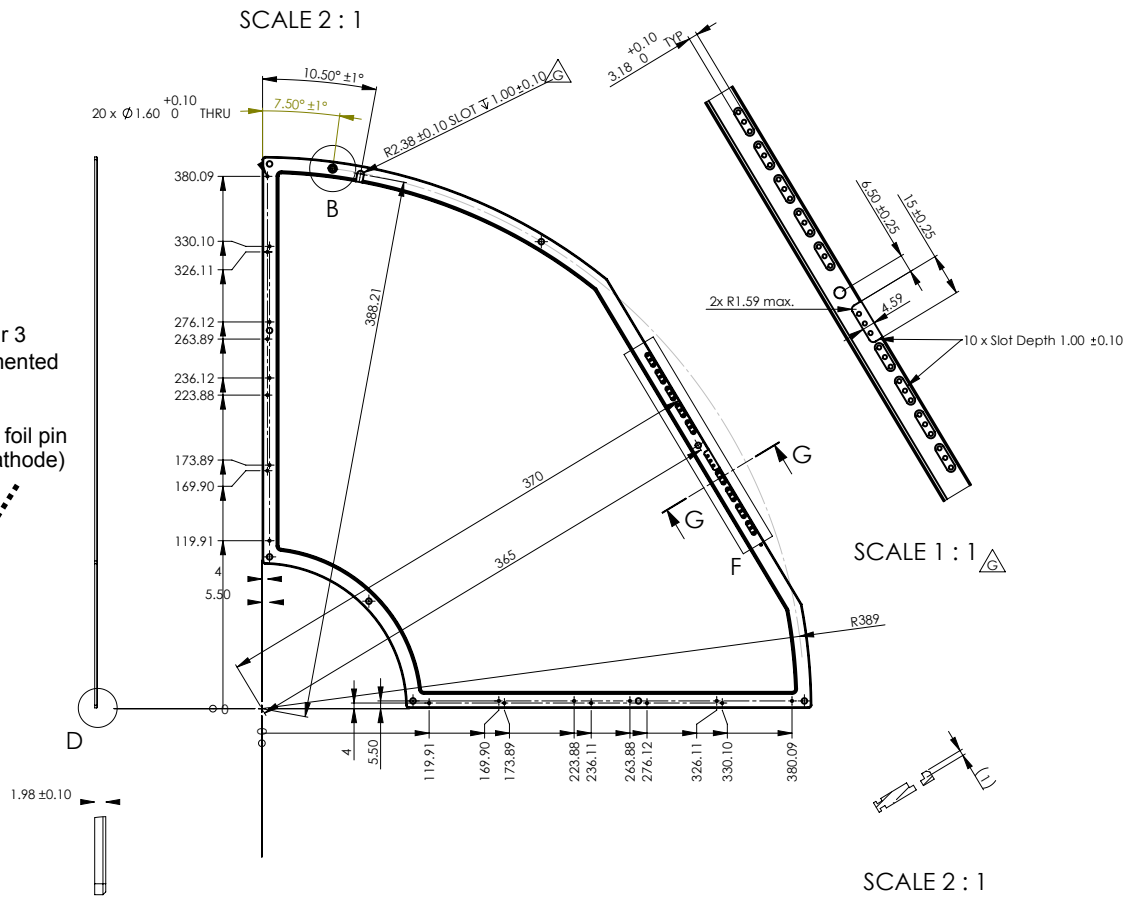

Matt Posik, Maxence Vandenbroucke,
Bernd Surrow (PI) and Franck Sabatie (PI)

Status - Forward GEM Tracking / Generic R&D

- Triple-GEM detector assembly 40cm X 40cm: GEM foils

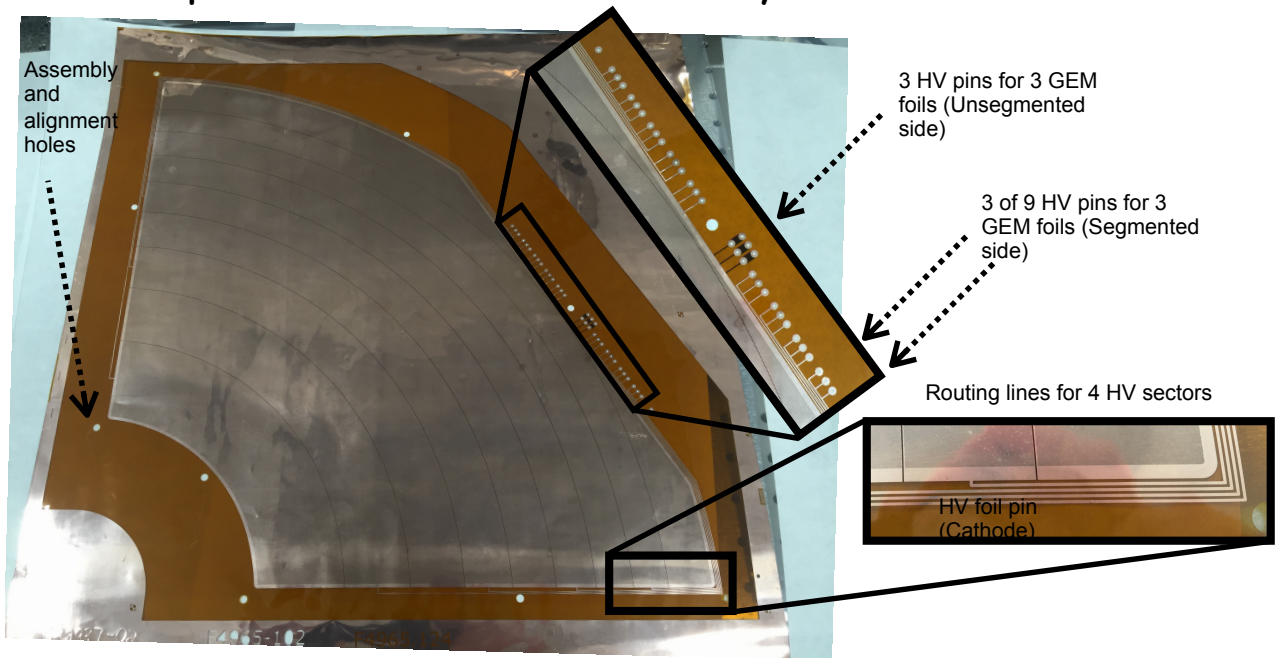

HV boards

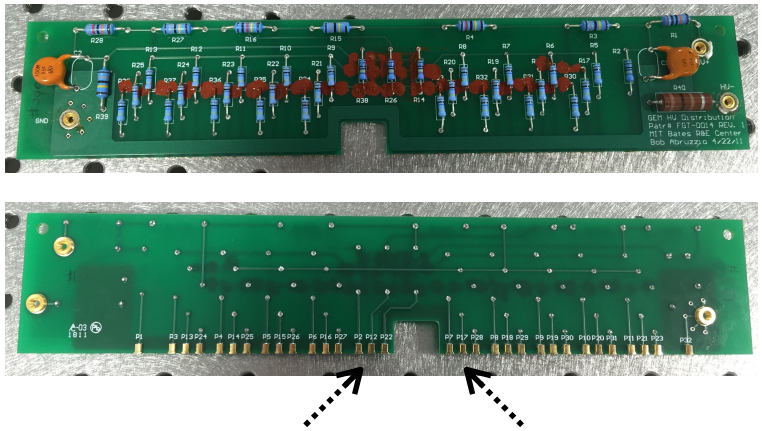

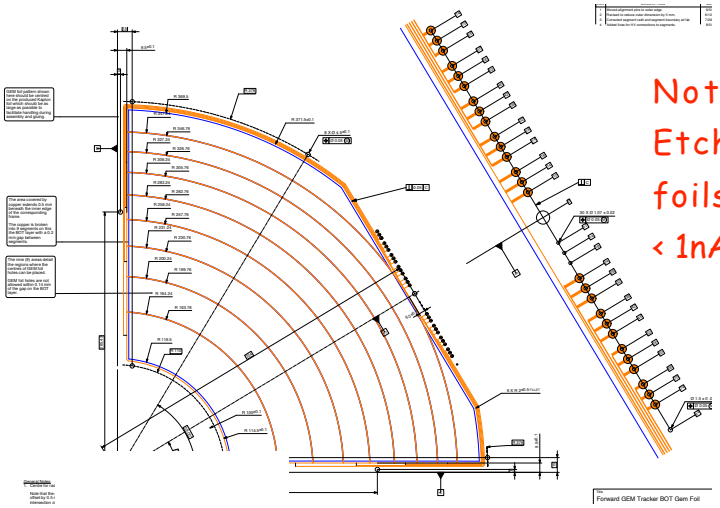

Note: All Tech-Etch, single-mask foils tested with < 1nA up to 550V

Matt Posik, Maxence Vandenbroucke,
Bernd Surrow (PI) and Franck Sabatie (PI)

Status - Forward GEM Tracking / Generic R&D

- Triple-GEM detector assembly 40cm X 40cm: Kapton rings and arrangements

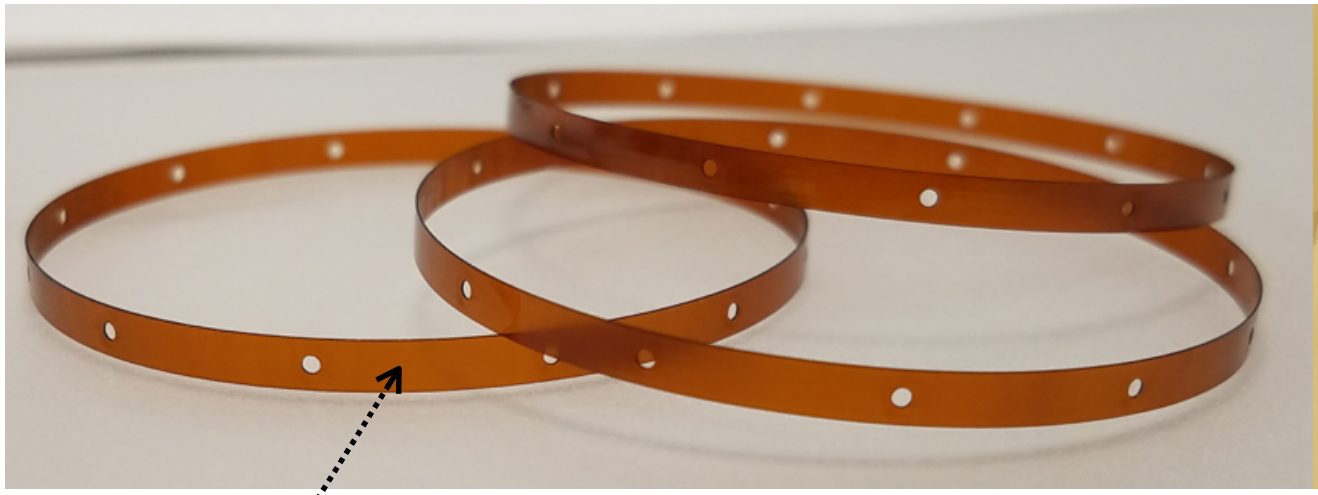

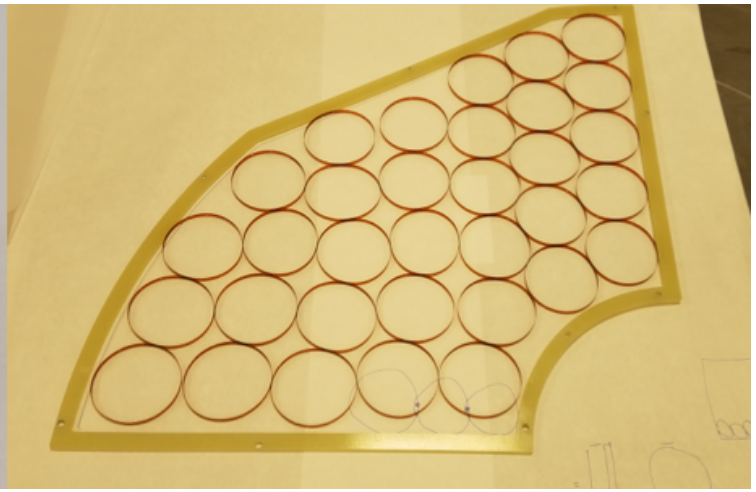

Kapton rings: 2”

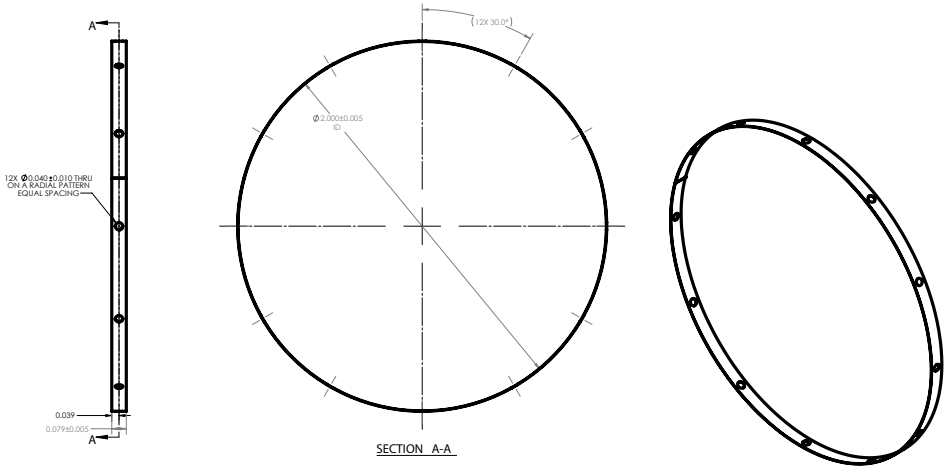

- Kapton rings of high quality 2” with gas holes
- Test of arrangements completed / Handling very simple
- Final arrangements not decided yet

Matt Posik, Maxence Vandenbroucke,
Bernd Surrow (PI) and Franck Sabatie (PI)

Status - Forward GEM Tracking / Generic R&D

- Triple-GEM detector assembly 40cm X 40cm: 2D readout foils / FEE

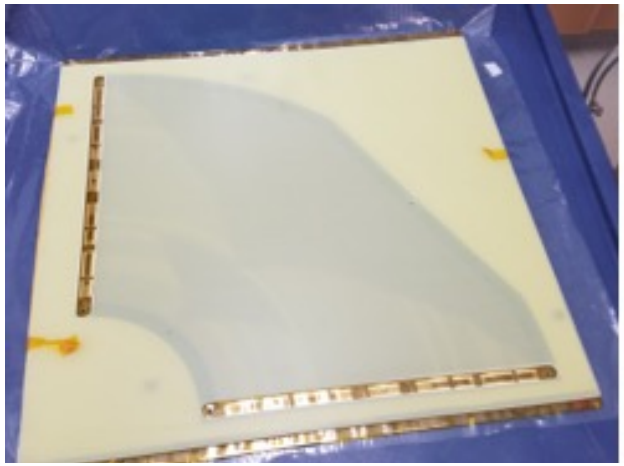

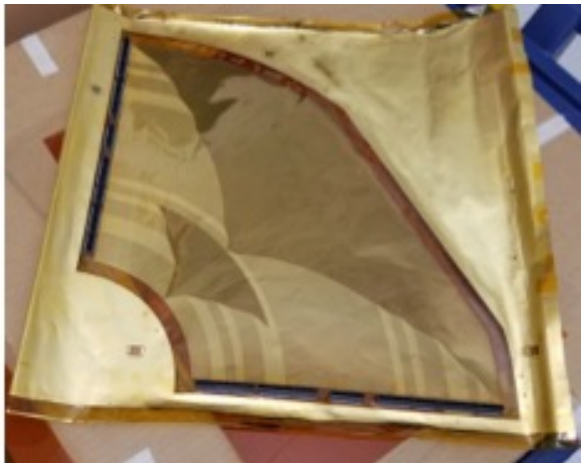

- All 2D readout foils available
- Commercial soldering of multi-pin connectors completed

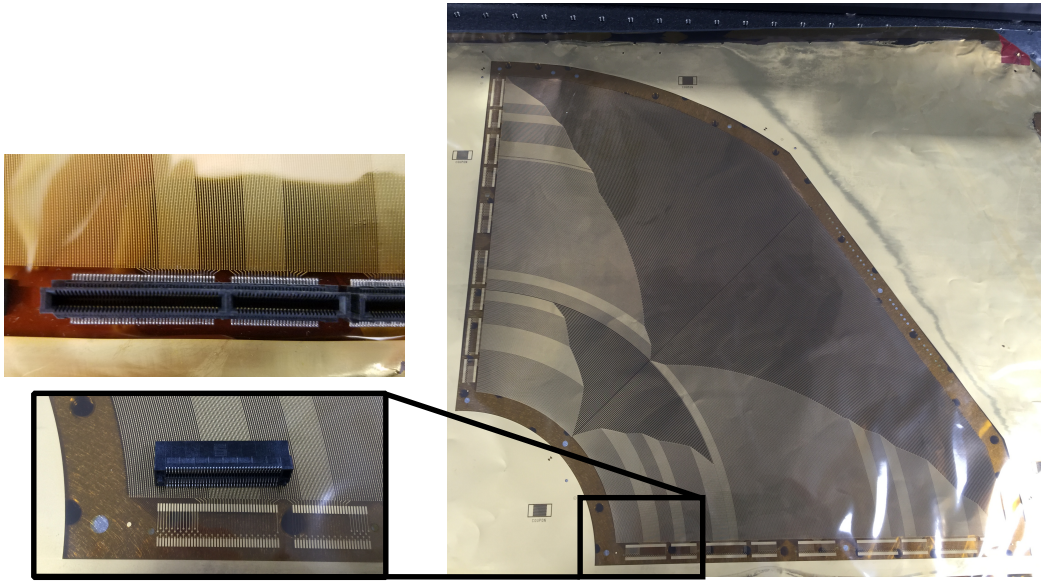

2D readout foils produced by Tech-Etch, independent of GEM production facility

Matt Posik, Maxence Vandenbroucke,
Bernd Surrow (PI) and Franck Sabatie (PI)

Status - Forward GEM Tracking / Generic R&D

- Triple-GEM detector assembly 40cm X 40cm: Tooling 1

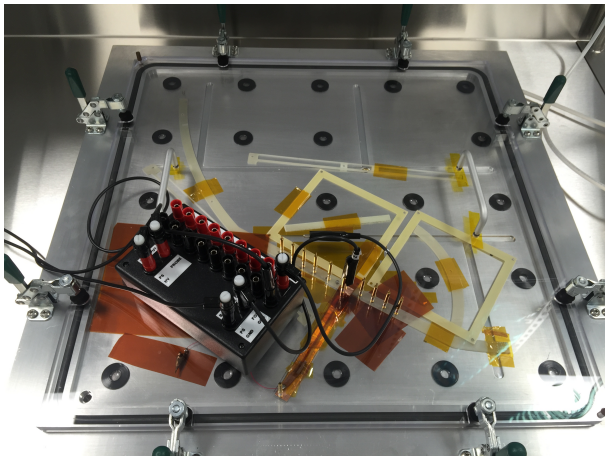

GEM nitrogen box / N_2 enclosure

New gas distribution inside TU Micro-Pattern clean-room facility with manometer for gas flow tests / Panel in preparation

Assembly tool with gas flow cover (Top)

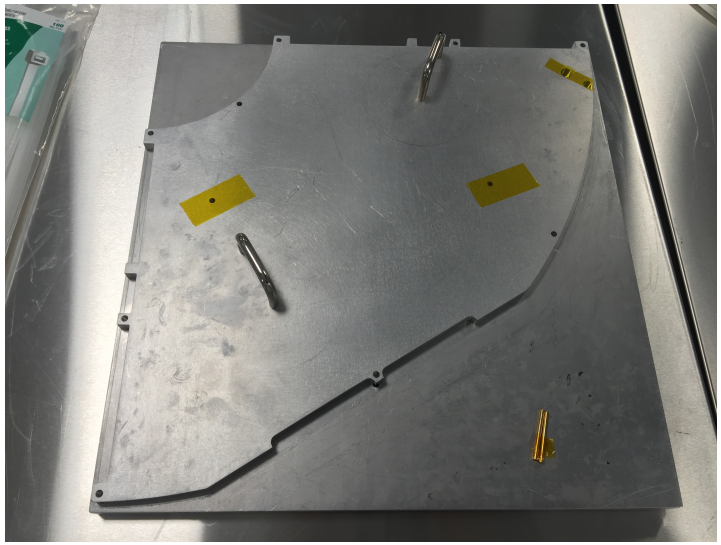

ISEG precision power supply and current measurement

Assembly tool with gas flow cover (Bottom)

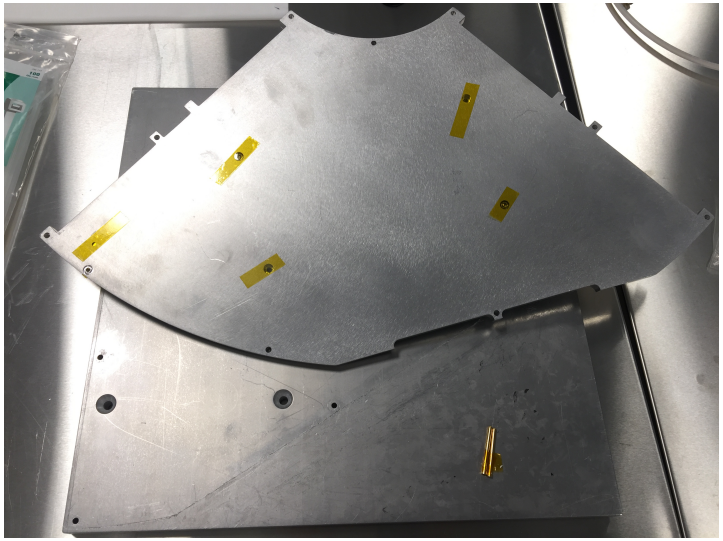

Matt Posik, Maxence Vandenbroucke,
Bernd Surrow (PI) and Franck Sabatie (PI)

Status - Forward GEM Tracking / Generic R&D

- Triple-GEM detector assembly 40cm X 40cm: Tooling 2

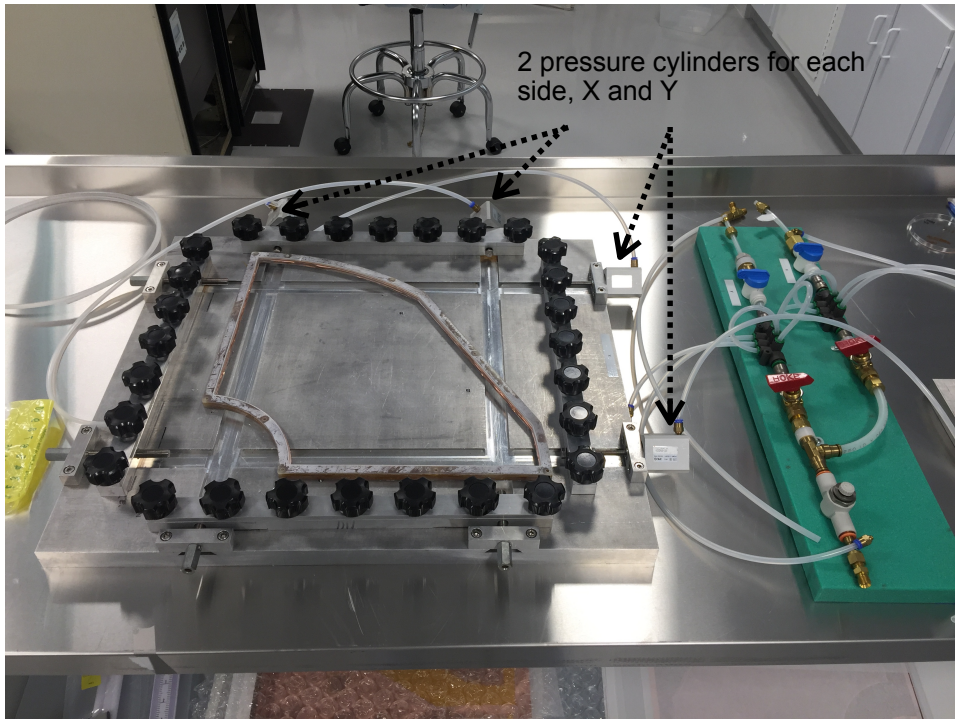

Stretching tool

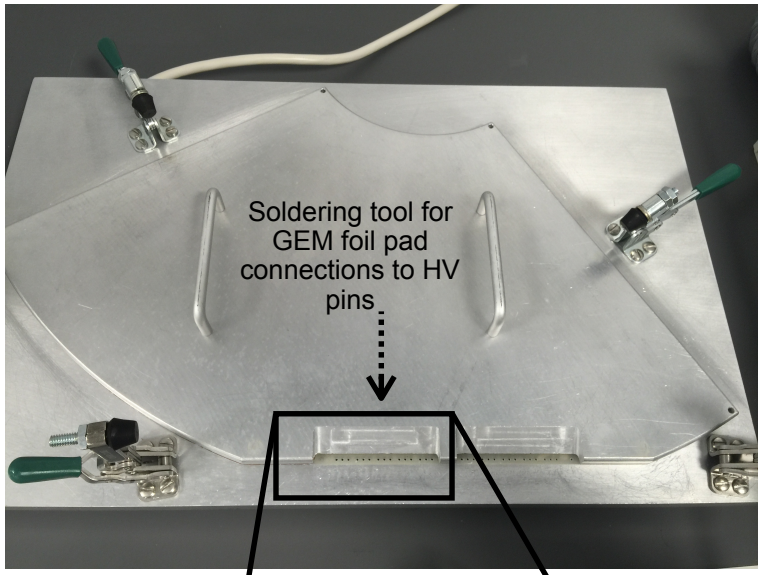

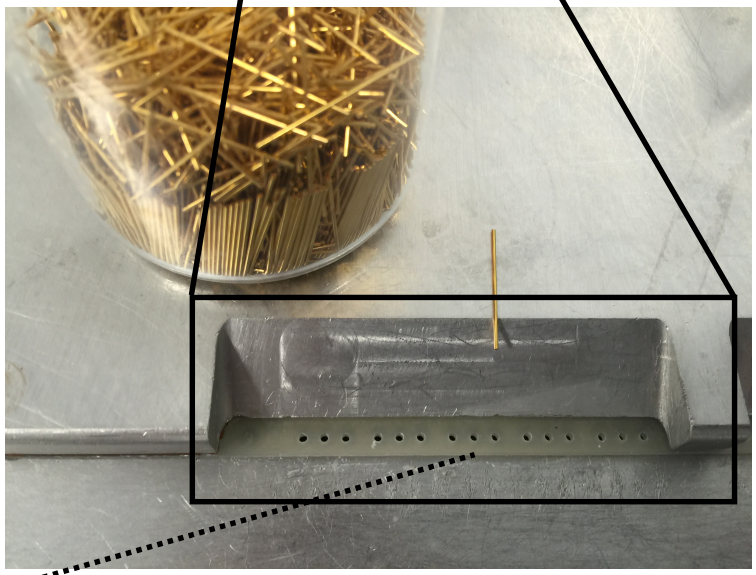

HV boards

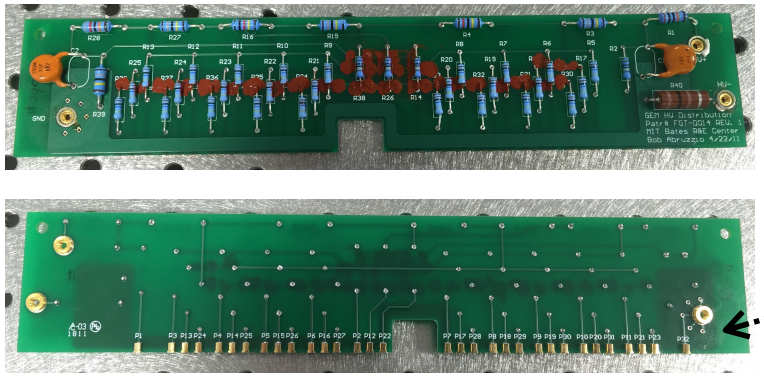

Matt Posik, Maxence Vandenbroucke,
Bernd Surrow (PI) and Franck Sabatie (PI)

Status - Forward GEM Tracking / Generic R&D

- Triple-GEM detector assembly 40cm X 40cm: Tooling 3

- Large ultra-sonic bath available and commissioned
- Basket large enough to allow cleaning of frames for EIC size frames
- Dimensions:225L, 750 mm (W) x 650 mm (D) x 520 mm (H)

Matt Posik, Maxence Vandenbroucke,
Bernd Surrow (PI) and Franck Sabatie (PI)

Status - Forward GEM Tracking / Generic R&D

- Triple-GEM detector assembly 40cm X 40cm: Tooling 4
  - Design of large GEM storage unit completed featuring multiple large shelves to accommodate EIC type components
  - Material: Lucite material
  - Machining starting soon at local machine shop

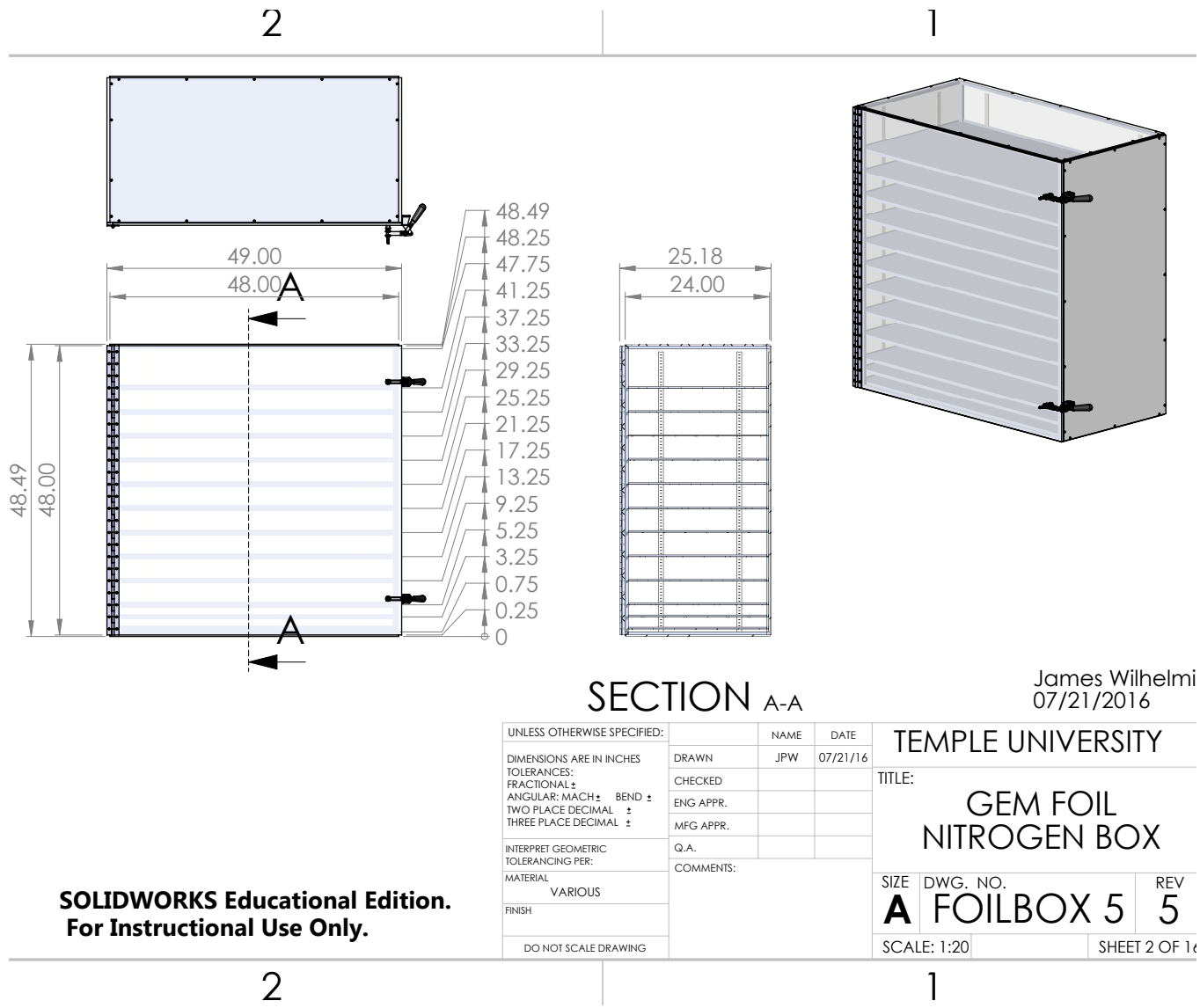

Matt Posik, Maxence Vandenbroucke,
Bernd Surrow (PI) and Franck Sabatie (PI)

Status - Forward GEM Tracking / Generic R&D

- Triple-GEM detector assembly 40cm X 40cm
  - Component preparation:
    1. GEM foils: All tested and ready to be stretched
    2. 2D readout foils available together with SAMTEC connectors. Soldering completed!
  - Stretching of GEM foils, HV foils and 2D readout foils with leakage current test after each assembly step
  - Stacking and assembly of triple-GEM chamber
  - Gas flow and gas leak tests
  - Cosmic-ray testing

Timeline

DONE

DONE

In progress

March 2017

May 2017

Summer 2017

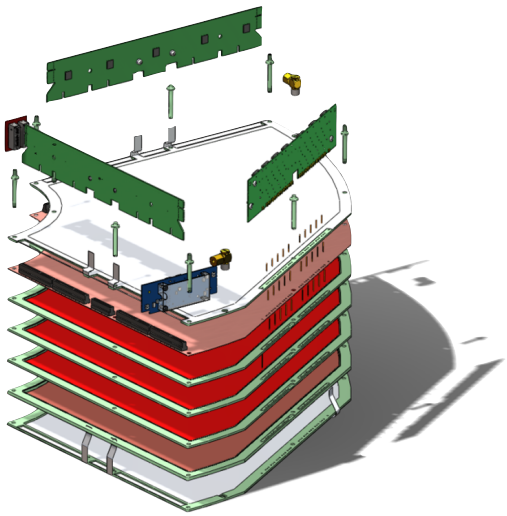

Commissioned cosmic-ray test stand

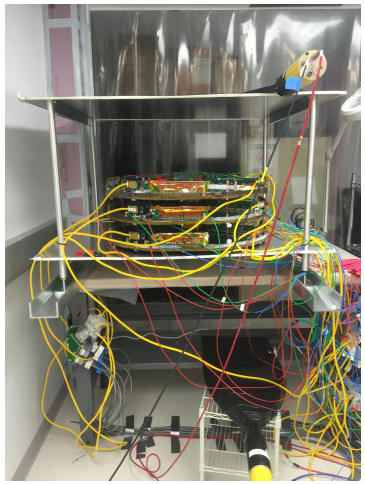

Matt Posik, Maxence Vandenbroucke,
Bernd Surrow (PI) and Franck Sabatie (PI)

Status - Forward GEM Tracking / Generic R&D

- X-ray enclosure
  - Preliminary design work for enclosure completed
  - Quoted received by Nelco for Pb-lined plywood / One side with Pb-glass

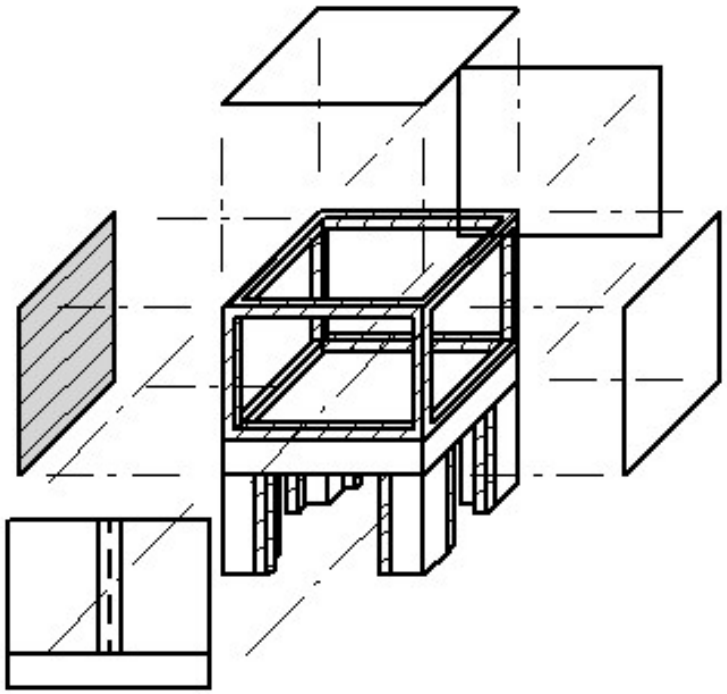

Purchased X-ray gun

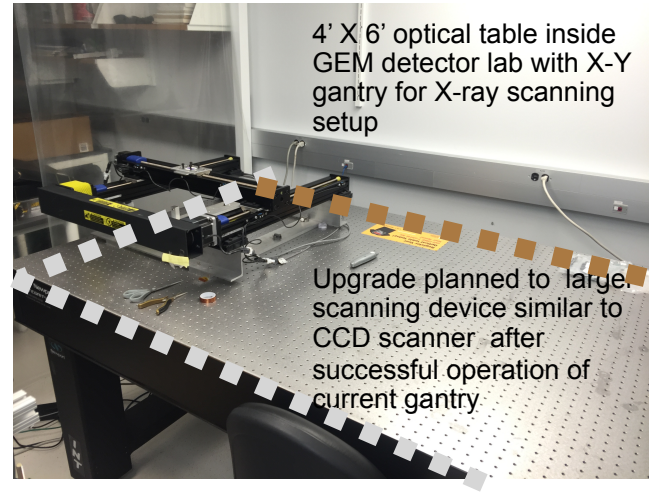

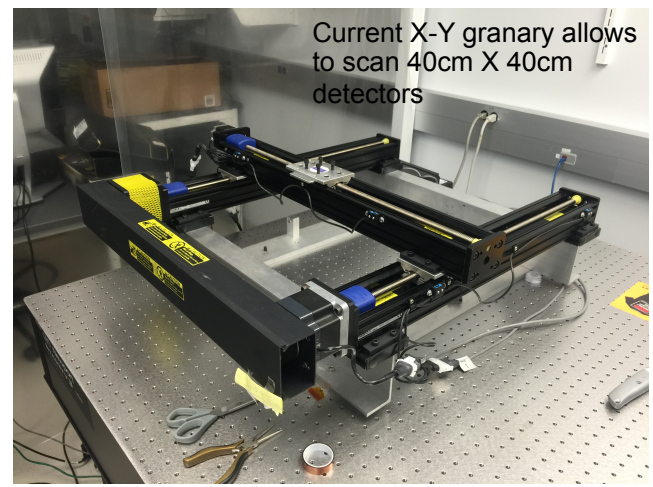

Matt Posik, Maxence Vandenbroucke,
Bernd Surrow (PI) and Franck Sabatie (PI)

Status - Forward GEM Tracking / Generic R&D

- Commercial component development
  - GEM foils: Tech-Etch Inc. (Continuation of effort of GEM foils will depend on large scale orders - Paused for the moment as directed by Board of Directors and President)
  - GEM foils: Silver Side Detectors (New SBIR proposal - Positively reviewed, but not funded as of now - Need to understand, B. Surrow in touch with program manager!)
  - HV foils: Tech-Etch Inc. - Continuing!
  - 2D readout foils: Tech-Etch Inc. - Continuing!
  - 2D readout foil / connector soldering: Proxy Inc.
  - Readout module (APV) / Passive DREAM readout card: Sierra Circuits Inc.
  - Frames: Circuit Connect Inc.
  - Kapton rings: Potomac Photonics Inc.

Matt Posik, Maxence Vandenbroucke,
Bernd Surrow (PI) and Franck Sabatie (PI)

Status - Barrel MM tracking / Generic R&D

Overview

- Curved MicroMegas for barrel based on carbon structure glued on thin PCB
- Idea validated for CLAS12 tracker
- Need to increase size: PCB size, mesh tension, capacitance and gain homogeneity
- Transition to resistive technology for MicroMegas detectors / No measurable sparking

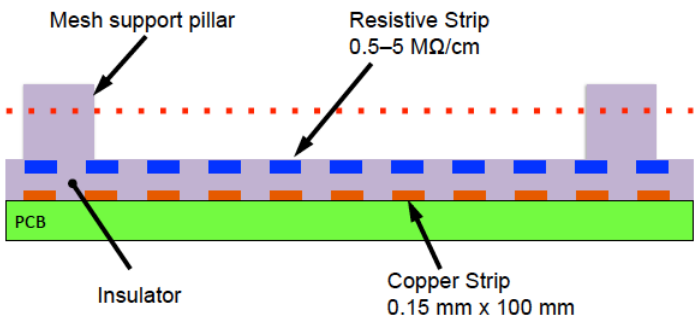

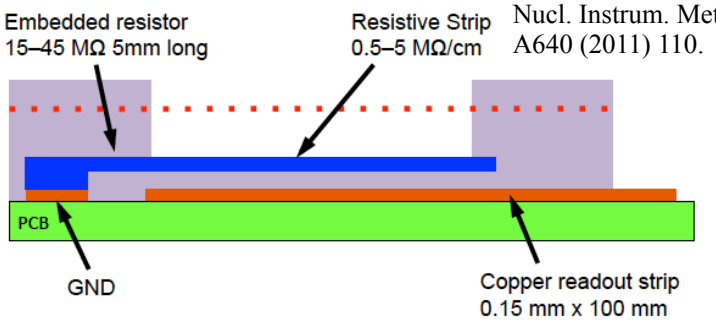

T. Alexopoulos et al., Nucl. Instrum. Meth. A640 (2011) 110.

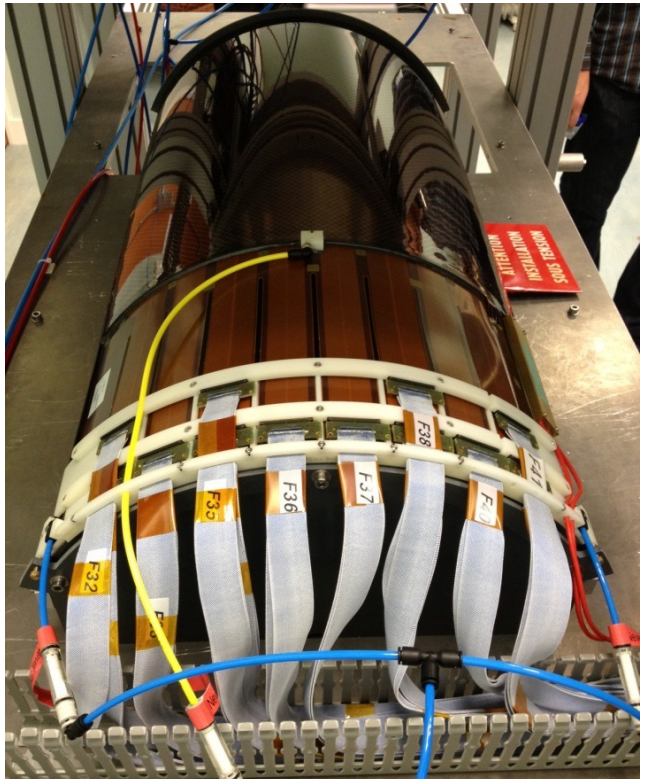

- First dedicated EIC large radius resistive 1D (Z) MM prototype 120 degree section, R=22.5cm, L=45cm
- Further extensive cosmic-ray testing / Analysis in progress
- Next: 2D design (C / Z)

Matt Posik, Maxence Vandenbroucke,
Bernd Surrow (PI) and Franck Sabatie (PI)

Status - Barrel MM tracking / Generic R&D

- DREAM chip readout system: MM / GEM
  - Saclay successfully designed and built transition cards to connect a FGT quarter section to their DREAM DAQ system
  - Further development of modular DREAM readout system (Analog solution!)
  - Triple-GEM test inside Saclay cosmic-ray test-stand (Mapping needs to be sorted out with help of new postdoc!)
  - Further testing of 1D MM prototypes
  - Design of MM 2D prototypes ongoing

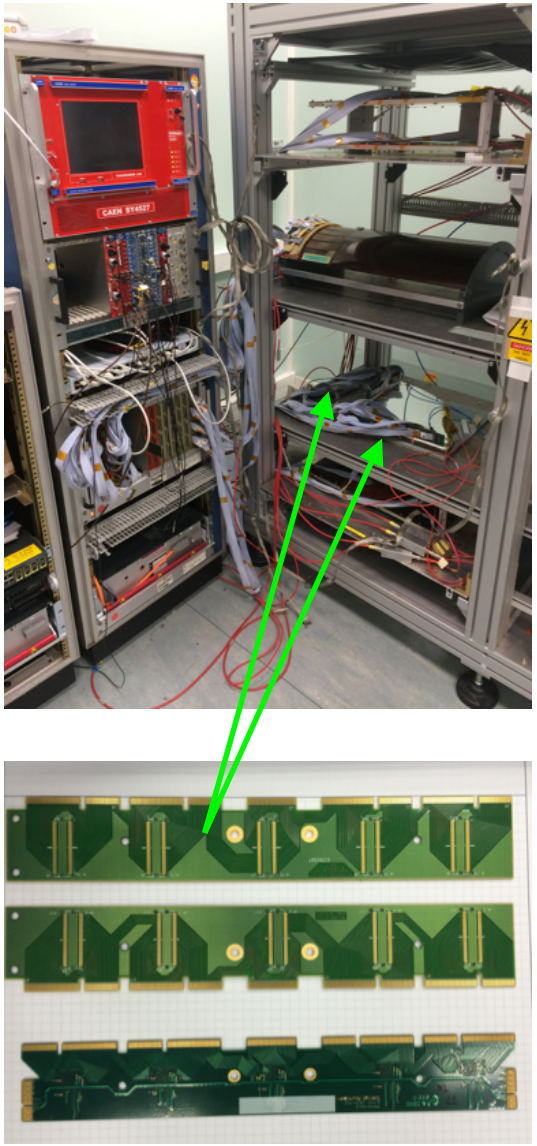

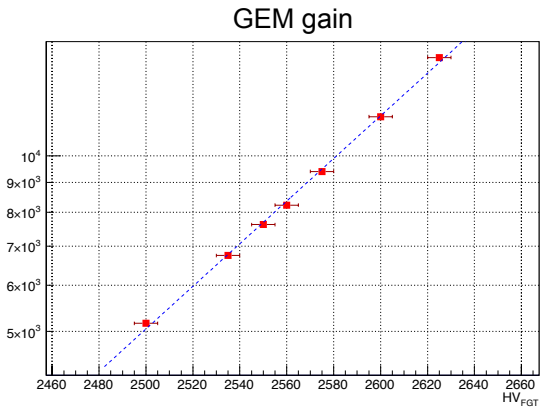

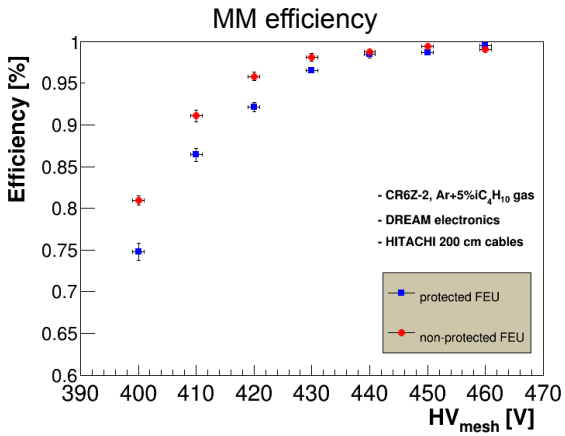

Matt Posik, Maxence Vandenbroucke,
Bernd Surrow (PI) and Franck Sabatie (PI)

Status - Barrel MM tracking / Generic R&D

- DREAM based VFE R&D
  - Reminder: Dream ASICs have been solely used within off-detector front-ends
    - 1 to 2 m long micro-coaxial cables to transport bare signals from detectors to the front-ends
    - Increased noise due to cable capacitances
    - Noise pick-up is not excluded despite cable shielding
  - Gaol: Implement a modular DREAM-based VFE to study various configurations
    - Analogue VFE contains only VFE Dream ASIC
      - Remote ADC and digital electronics housed on off-detector front-ends or even on back-end electronics
      - Develop a solution for long distance (3-5 m) transmission line for the DREAM differential analogue output signal
    - Mixed analogue-digital VFE contains DREAM ASIC and ADC (and possibly some digital processing means)
    - Study synchronization (clock-trigger) and control signal distribution
  - Outcome: improve S/N ratio and DREAM-based trigger efficiency

Matt Posik, Maxence Vandenbroucke,
Bernd Surrow (PI) and Franck Sabatie (PI)

Status - Barrel MM tracking / Generic R&D

- VFE Layout

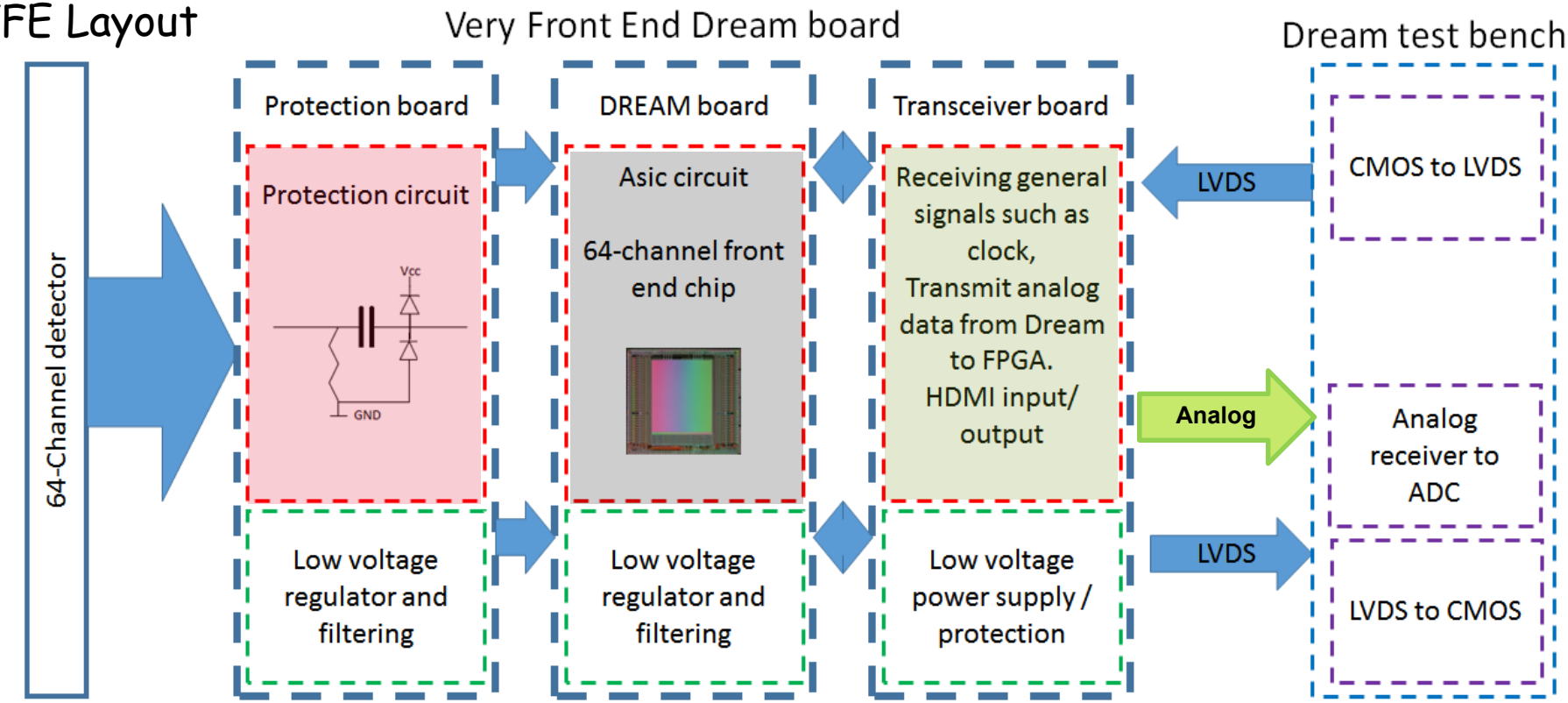

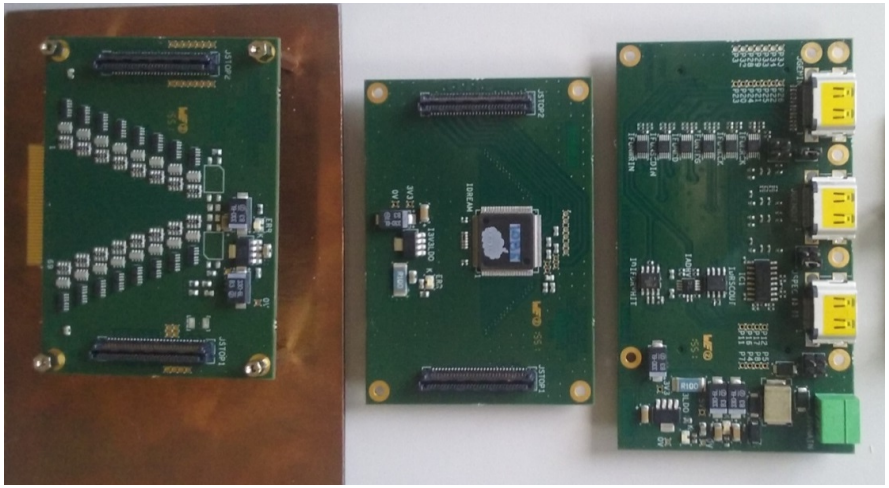

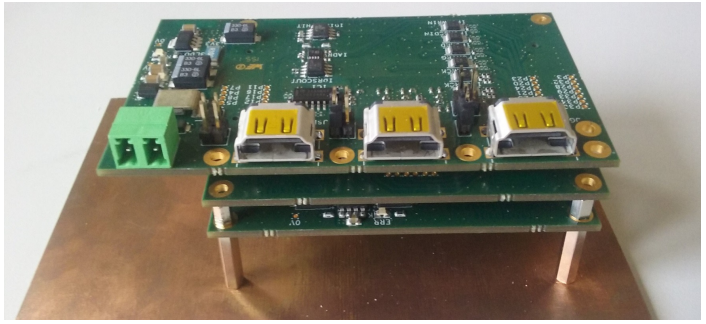

Matt Posik, Maxence Vandenbroucke,
Bernd Surrow (PI) and Franck Sabatie (PI)

Status - Barrel MM tracking / Generic R&D

- Analogue VFE: Test Bench

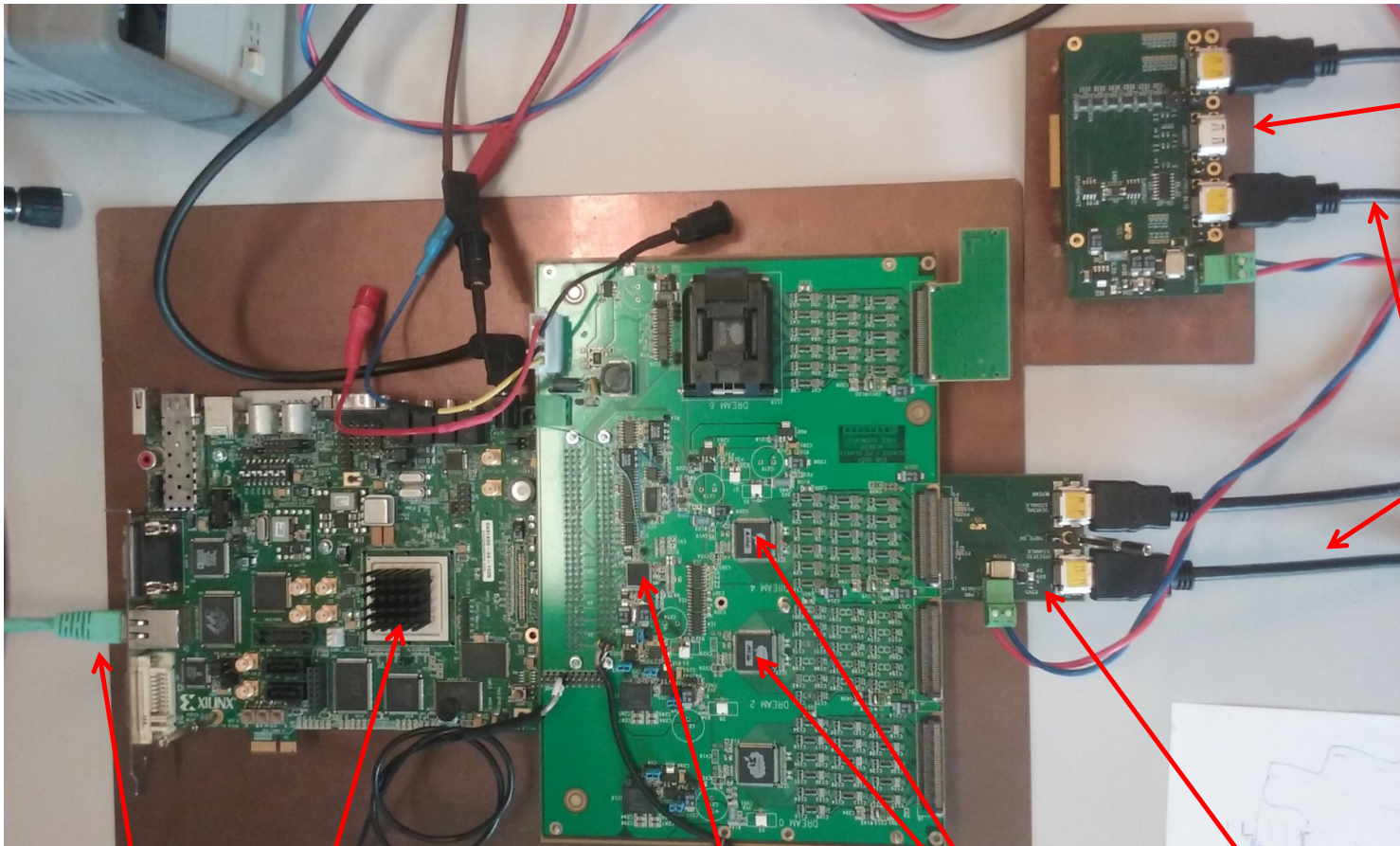

Matt Posik, Maxence Vandenbroucke,
Bernd Surrow (PI) and Franck Sabatie (PI)

Status - Barrel MM tracking / Generic R&D

Current Status

- Analogue VFE boards produced
  - Together with the DREAM test bench HDMI adaption card
- Basic functionalities validated with up to 5 m HDMI cables
  - DREAM slow control
  - On VFE pulse generation
  - Analogue signal transmission
- VFE synchronization achieved
  - Clock phase adjustment according to HDMI cable length
    - Dynamic FPGA reconfiguration by control software
- External signal injection
  - Injector PCB-s produced
  - **First comparison results of VFE DREAM onboard DREAM responses are encouraging**
    - Analogue buffer on Dream test bend (old generation from 2011) limits the chain's dynamic range to 0.9
    - The max voltage span is 1.8 V instead of 2.0 , independently of HDMI cable length
    - Issue can be remedied by changing the analogue buffer to a more recent counterpart
- **Activity has been paused since October 2016**
  - Master's student fellowship finished

Matt Posik, Maxence Vandenbroucke,
Bernd Surrow (PI) and Franck Sabatie (PI)

Status - Barrel MM tracking / Generic R&D

Barrel MM effort

- Main goal for FY17 - 2D design completion
- Next technological step after 1D-curved-resistive, 2D-curved-metallic and 2D-flat-resistive
- Will profit from experience with CLAS12, Asacusa AMT and Mcube
- Complete design of 2D MM prototype detectors followed by ordering of components, assembly and testing

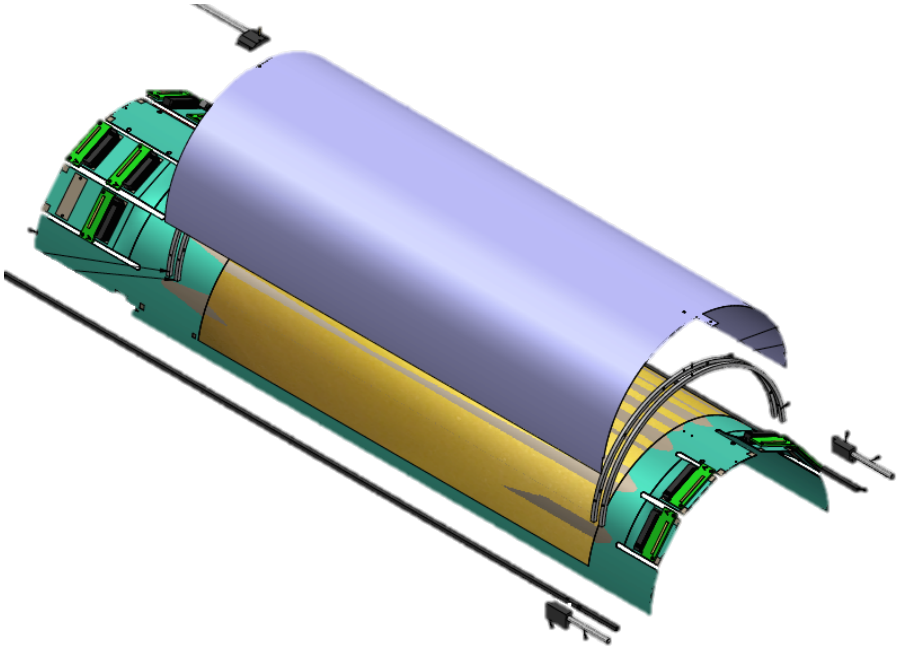

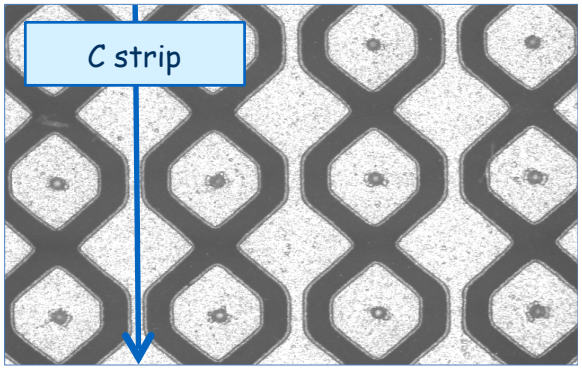

Read-out pattern (top)

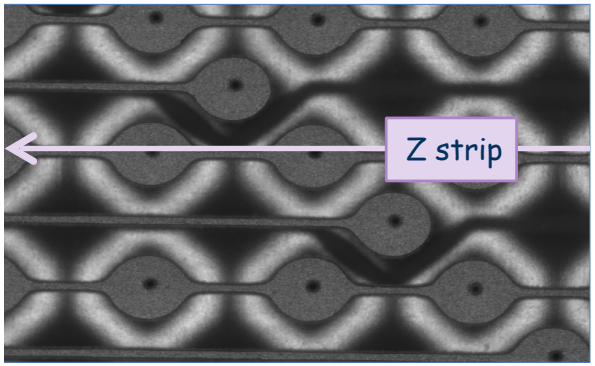

Read-out pattern (bottom)

Matt Posik, Maxence Vandenbroucke,
Bernd Surrow (PI) and Franck Sabatie (PI)

Plans - GEM & MM / Targeted R&D eRD3/6

- Forward GEM effort
  - Acquire component for large sector assembly using different assembly technique and spacer setup compared to FIT and UVA as presented earlier
  - Prepare various new tooling components locally at Temple University
  - Need: 3 GEM foils / 1 2D readout foil / 1 HV foil / 6 sets of frames / Tooling / Labor and machining
  - Visit at UVA for information exchange on July 19, 2016

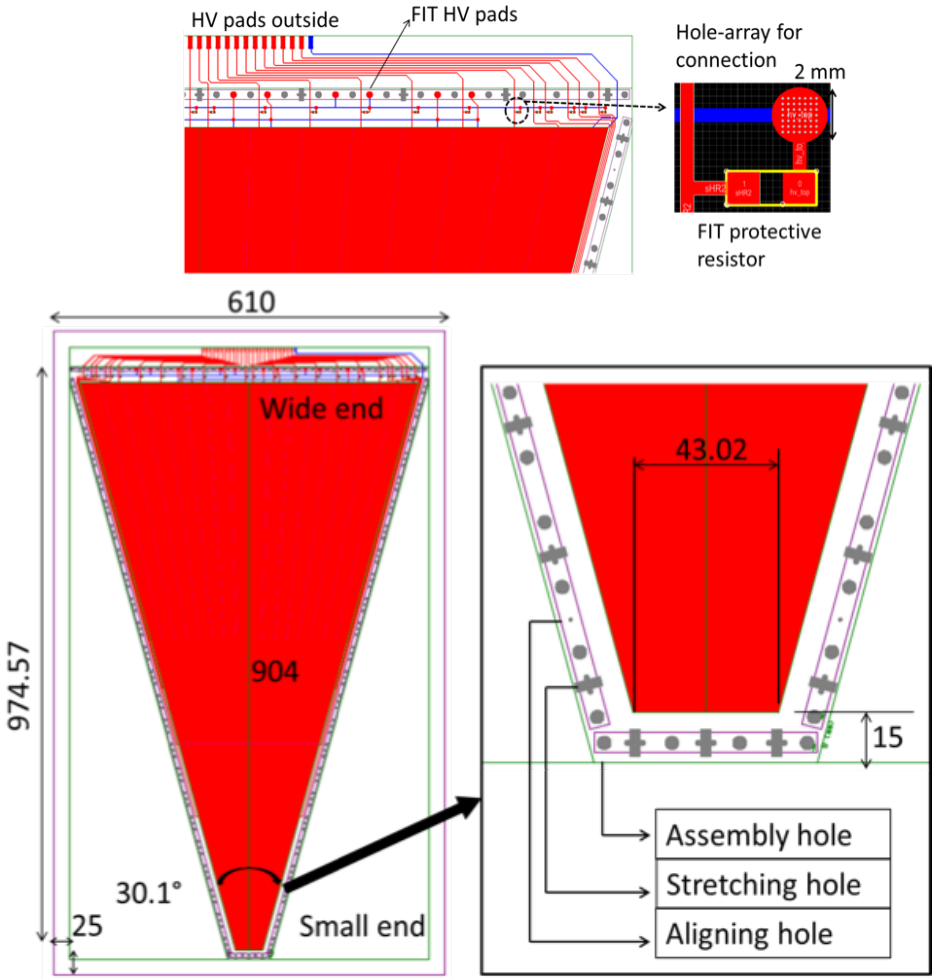

EIC common foil design drawn by Aiwu Zhang (FIT, EIC postdoc)

Matt Posik, Maxence Vandenbroucke,
Bernd Surrow (PI) and Franck Sabatie (PI)

Plans - GEM & MM / Targeted R&D eRD3/6

- Barrel MM effort

Timeline

- Ordering of components, assembly and testing (Generic R&D) (Funding required!)

FY 17

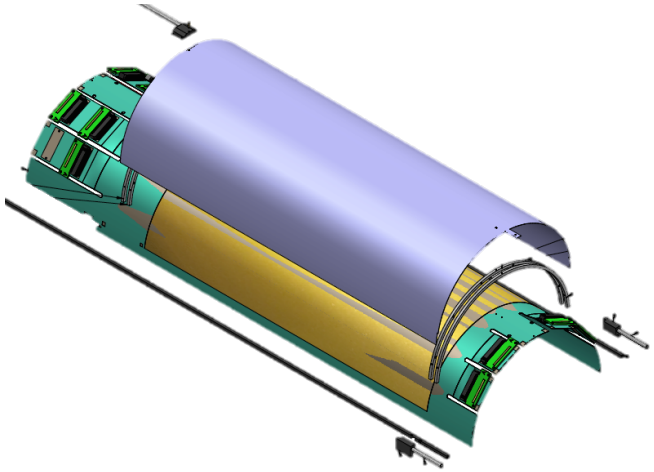

FY 18

- Testing

- Preparation of standalone DREAM-chip based DAQ system at Temple University (Funding required!)

FY 17

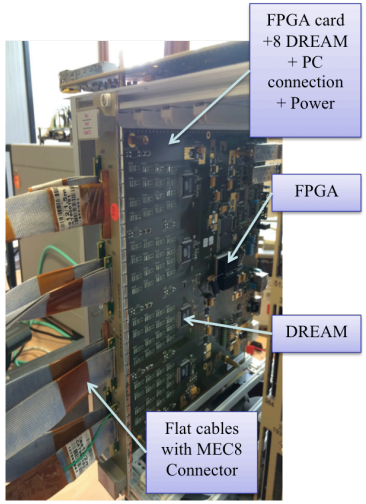

Matt Posik, Maxence Vandenbroucke,
Bernd Surrow (PI) and Franck Sabatie (PI)

Budget request FY18

- Generic R&D EIC: Complete by FY18
  - Highest priority: Continued postdoc support
  - Minimal travel support
  - Material / Equipment: MM 2D
- R&D program of eRD3/6:
  - Highest priority: Continued postdoc support
  - Minimal travel support
  - Material / Equipment: Large sector prototypes

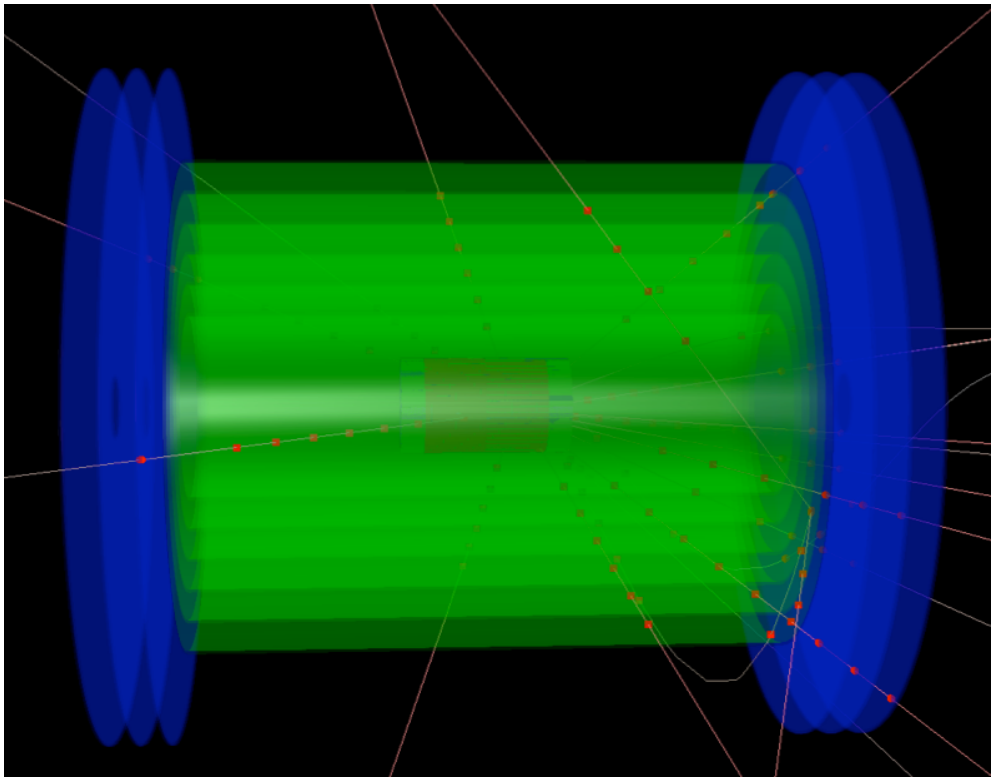

Summary / Outlook

- Summary / Outlook
  - Forward GEM tracking
    - Generic R&D:
      - Acquired all components and prepared tooling for 40cm X 40cm assembly / Assembly over next 1/4 year
      - Design of CCD scanner assembled and testing over next 1/4 year
      - Design of X-ray enclosure underway / Urgently needed for operation of existing X-ray gun
    - Targeted R&D: Order components for large EIC sector segment requires funding followed by assembly

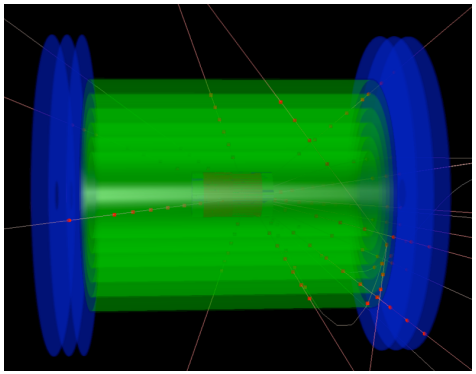

  - Barrel MicroMegas tracking
    - Generic R&D: Design and assembly of 2D MM - Critical step to complete R&D program
    - Targeted R&D: Dream chip readout system (Funding required!)
  - Fully merge eRD3/6 efforts beyond generic R&D programs
  - 5th International Conference on Micro-Pattern Detectors (MPGD2017) at Temple University: Strong recognition of EIC R&D program
    - Organization by eRD3/6 gas detector groups
    - Date: May 22-26, 2017

Matt Posik, Maxence Vandenbroucke,
Bernd Surrow (PI) and Franck Sabatie (PI)