Proposal for electron Compton polarimetry at EIC

EIC R&D meeting

Alexandre Camsonne

July 9th 2015

eRHIC electron beam

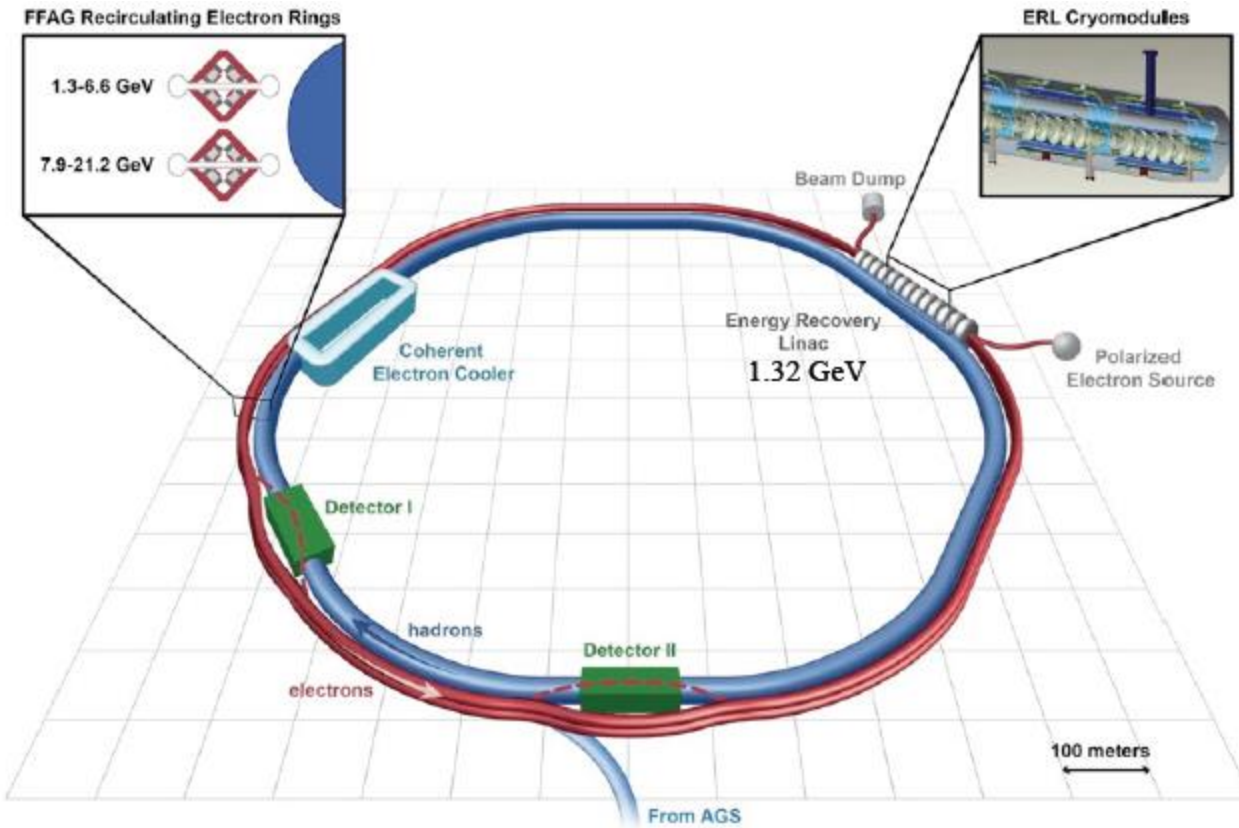

12 sources : each source interact with same ion bunch
Need to measure each source polarization

- 6.6 GeV to 21.2 GeV
- **10.8 MHz Repetition rate**
- Up to 21 recirculations
- 50 mA with "gatling gun" design
- >70 % polarization
- Similar to CEBAF

Vadim Ptitsyn
eRHIC Accelerator Design
EIC2014

MEIC electron beam

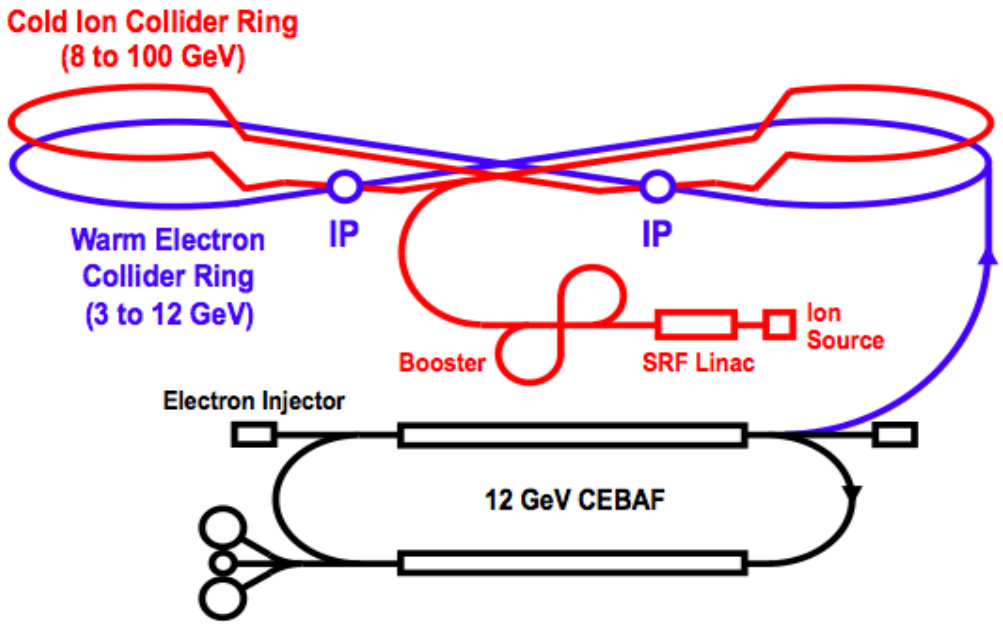

Energy (GeV)	3	5	7	9	10
Estimated Pol. Lifetime (hours)	66	5.2	2.2	1.3	0.8

Storage ring – Ring ring

3 A at 3 GeV 476 MHz and 0.720 mA at 10 GeV

Polarized > 70 %

2 macrobunches with opposite polarization

- Measure polarization average of each macrobunch
- Every electron bunch crosses every ion bunch

Integrated Interaction Region & Detector

Accelerator view of IR Layout

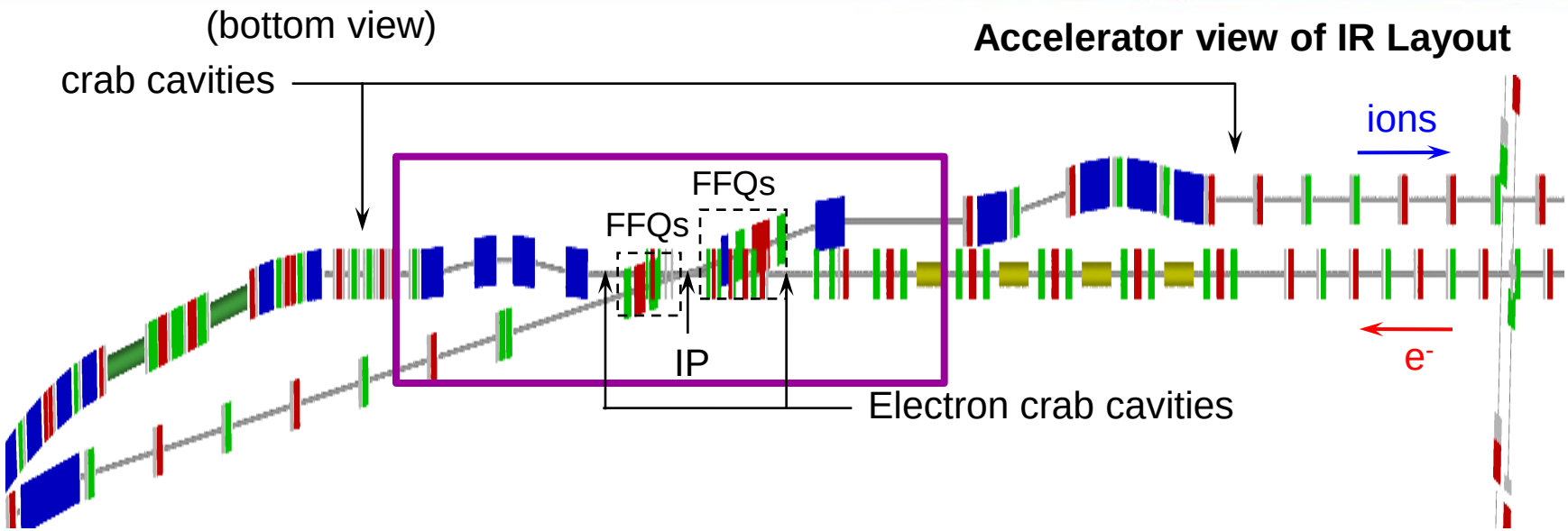

- Design emphasis on polarization (figure-8) and on integrated detector/interaction region

Nuclear Physics view of IR Layout

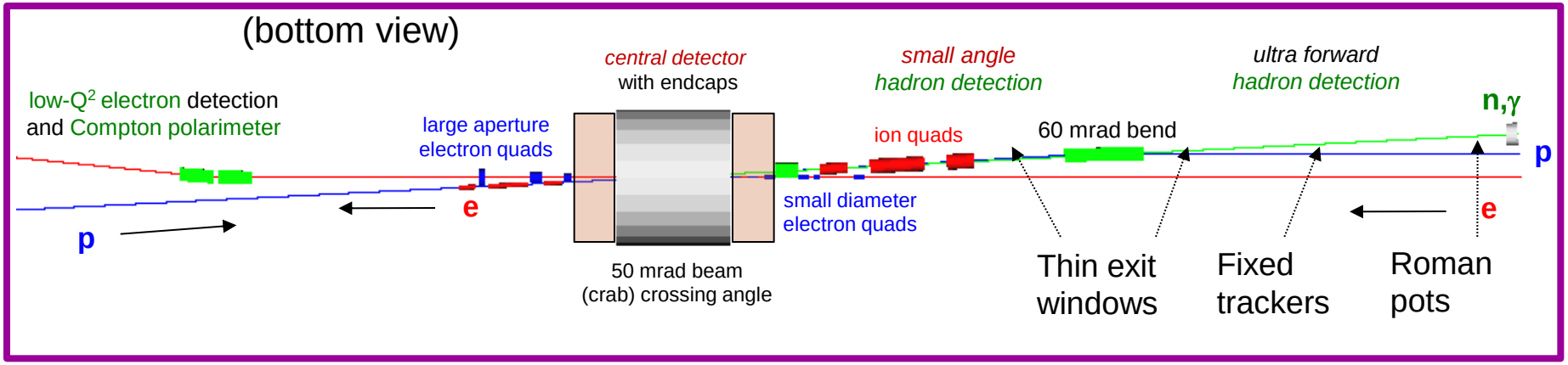

Low Q2 tagger and full IR

Zero degree electron tagger for quasi-real photoproduction

- **C magnet**
- **Side window with long tracker (scintillator array or scintillating fiber)**
- **Preliminary 10^{-3} resolution on electron momentum**

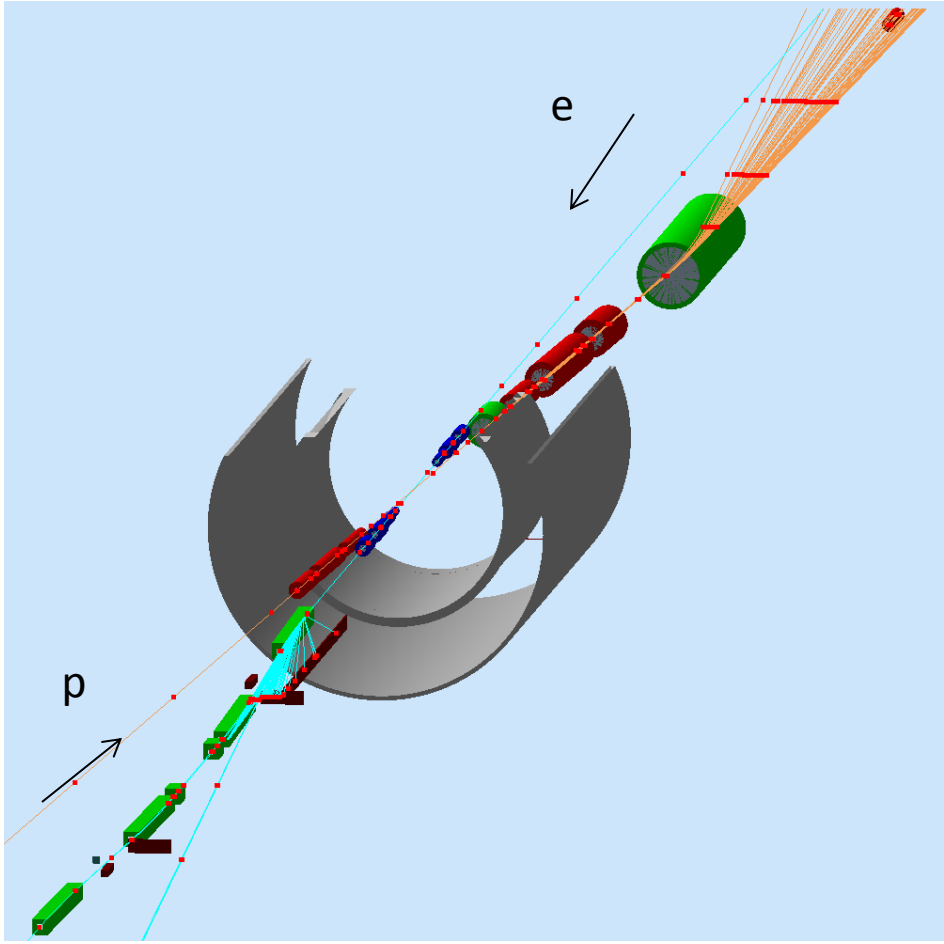

Compton asymmetry

$\sigma(\ \vec{e} + \overset{\circlearrowleft}{\gamma} \longrightarrow e' + \gamma'\ ) \neq \sigma(\ \overleftarrow{e} + \overset{\circlearrowleft}{\gamma} \longrightarrow e' + \gamma'\ )$

$$\frac{N^{+}-N^{-}}{N^{+}+N^{-}}\left(E_e, k_\gamma, k_{\gamma'}\right) = P_e * A(E_e, k_\gamma, k_{\gamma'})$$

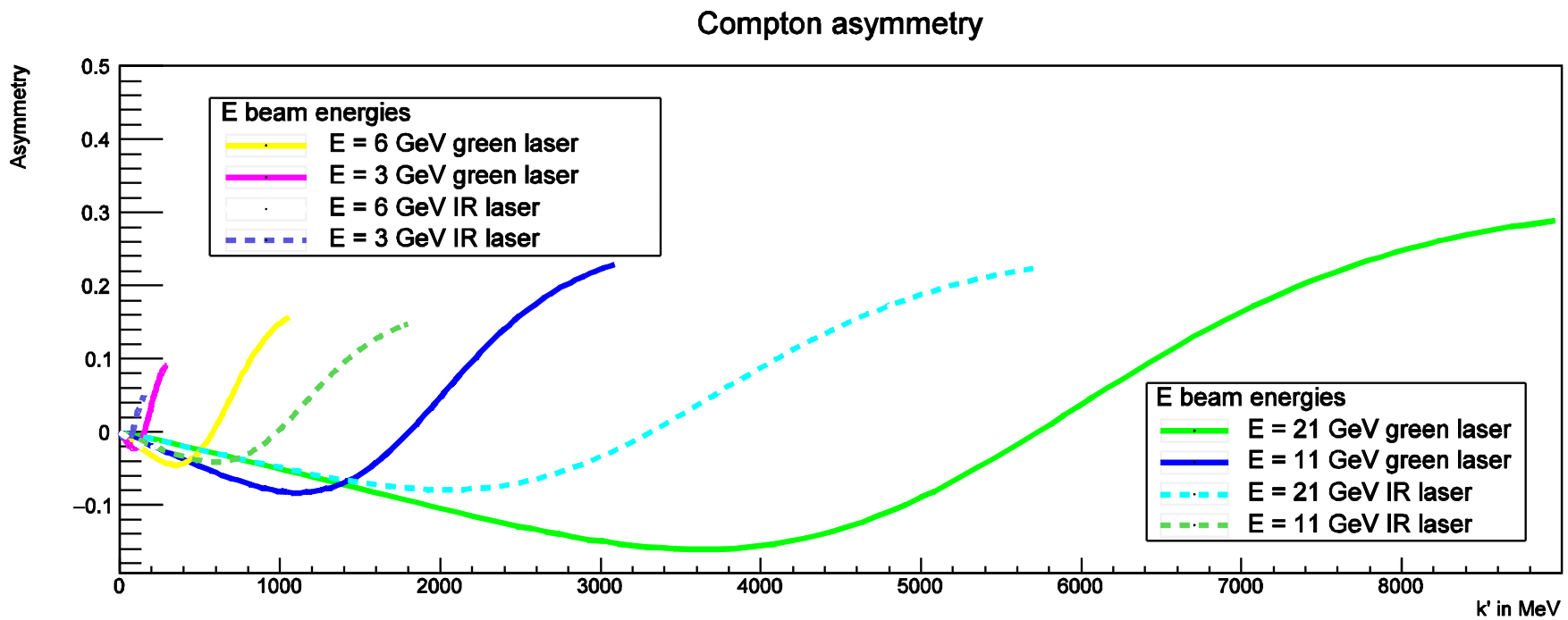

Allow non invasive polarization measurement

Compton detection

- Photon detection
  - Photons in small cone
  - Total absorption
  - Integrated or differential method
  - Background
    - Synchrotron radiation since behind magnet
    - Bremsstrahlung

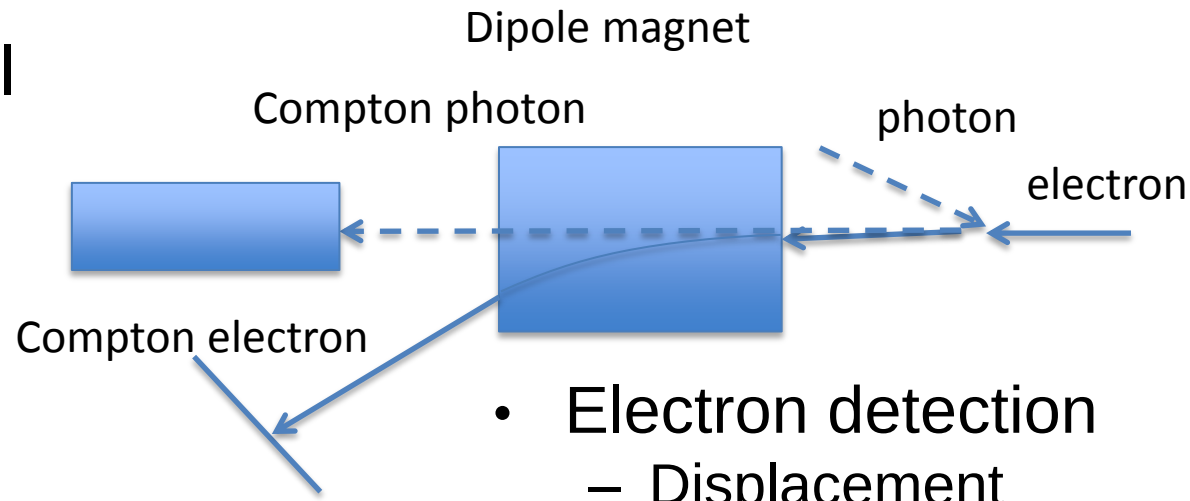

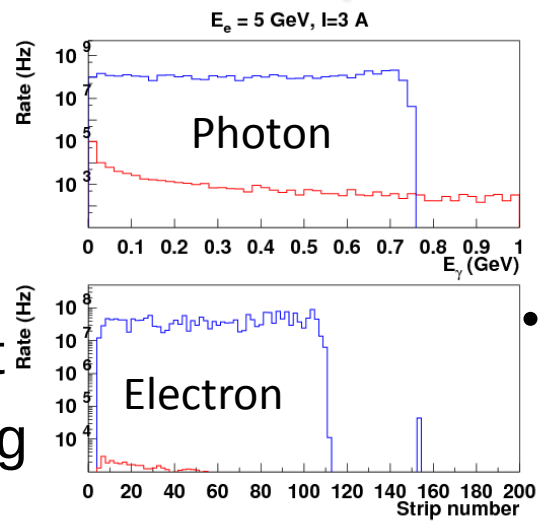

- Electron detection
  - Displacement inversely proportional to scattering energy
  - Differential method
  - Minimum ionizing
- Background
  - Bremsstrahlung
  - Halo

Photon vs electron

EIC ≤ 1% polarimetry accuracy requires electron detection

- Photon

- **Counting differential**
  - Response function of calorimeter
  - Low energy resolution
  - Threshold
  - Calibration
  - Dead time
  - **Example:** Hera 1.6 % @ 27.5 GeV
- **Integrated (best accuracy but might be difficult at high energy)**
  - No dead time
  - No threshold
  - Sensitive to background
  - Asymmetry smaller
  - Need good linearity
  - **Example:** Hall A: 1% @ 3 GeV

- Electron

- **Counting differential**
  - Response function
  - Resolution
  - Threshold due to detector at distance
  - Dead time correction
  - Self calibration by using the zero crossing and Compton edge
  - Compute asymmetry at each strip
  - Global fit
  - **Example:** Hall C: 0.6% @ 1 GeV

Best polarization measurement: SLC SLD Compton polarimeter using electron detection: 0.52 % @ 21 GeV

Laser system

- Laser power
  - Statistics
  - Signal to Background

Laser	Typical power (kW)
CW	0.010 to 0.1
RF pulsed	0.10 to 0.4
Cavity	5
RF pulsed cavity	300

Laser system

Rates and backgrounds: MEIC

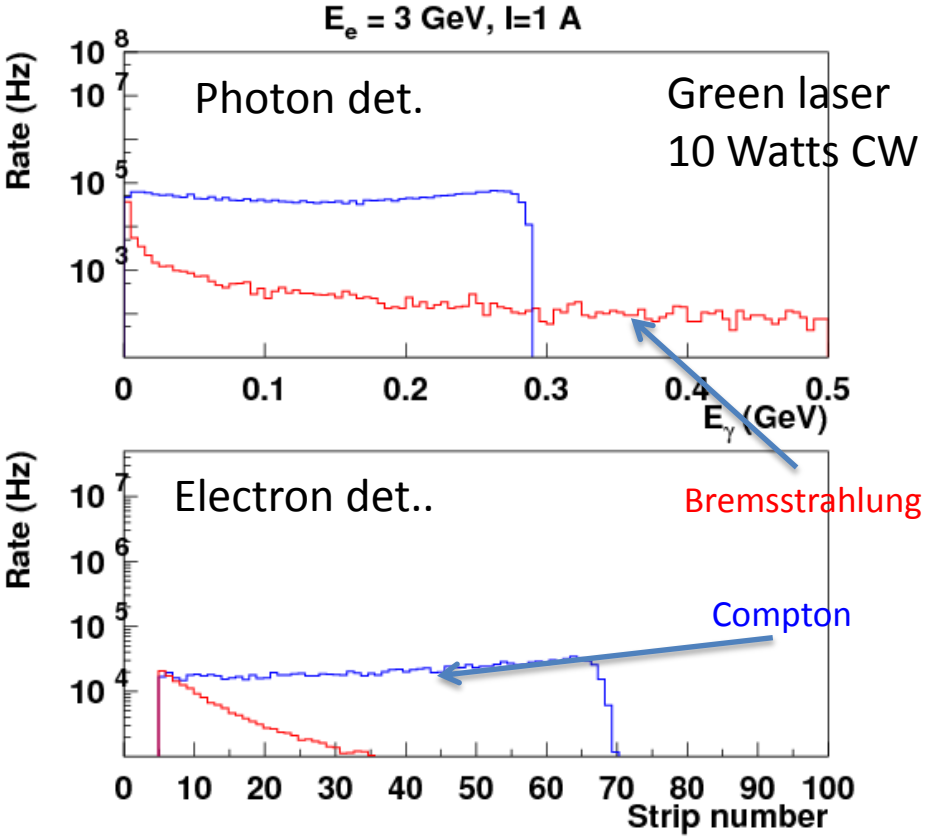

Rates and backgrounds: MEIC

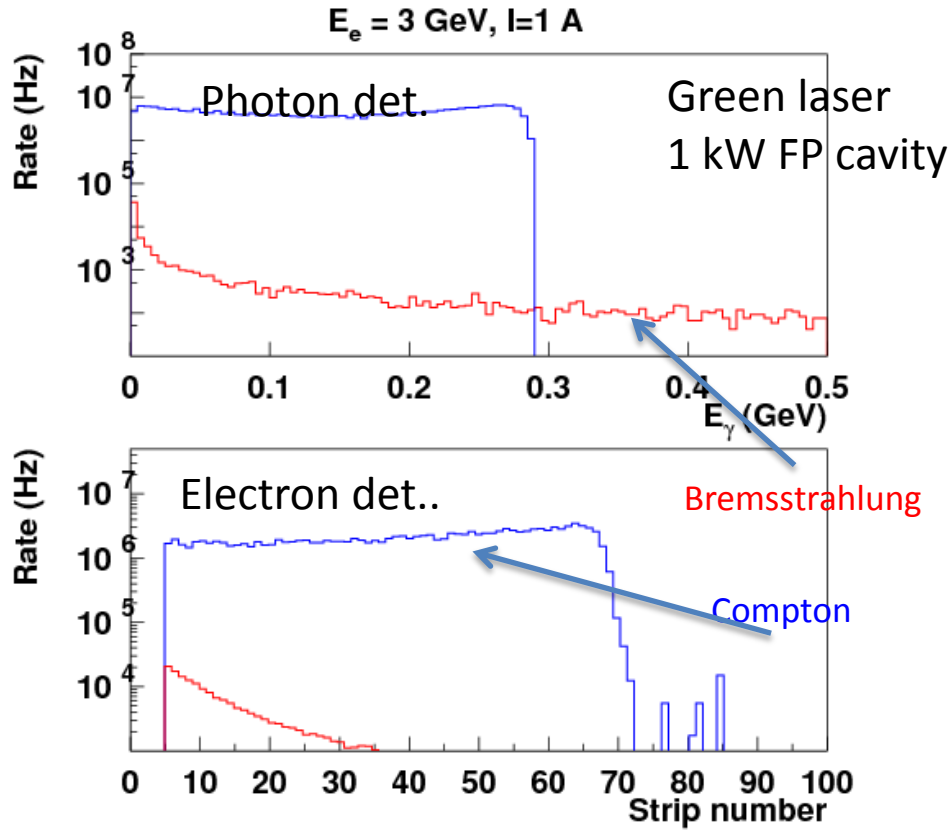

Low Q^2 chicane layout

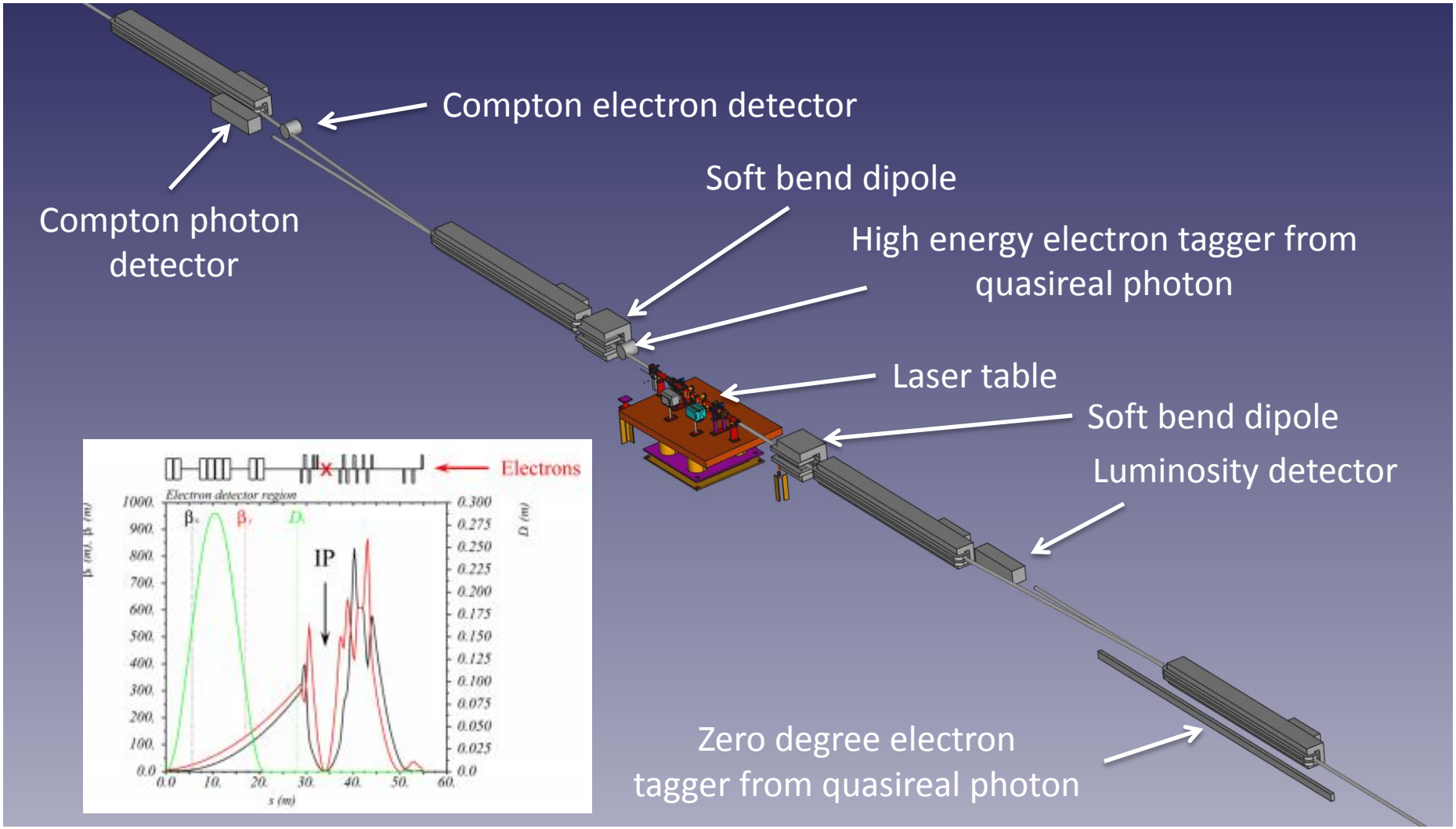

Compton polarimeter

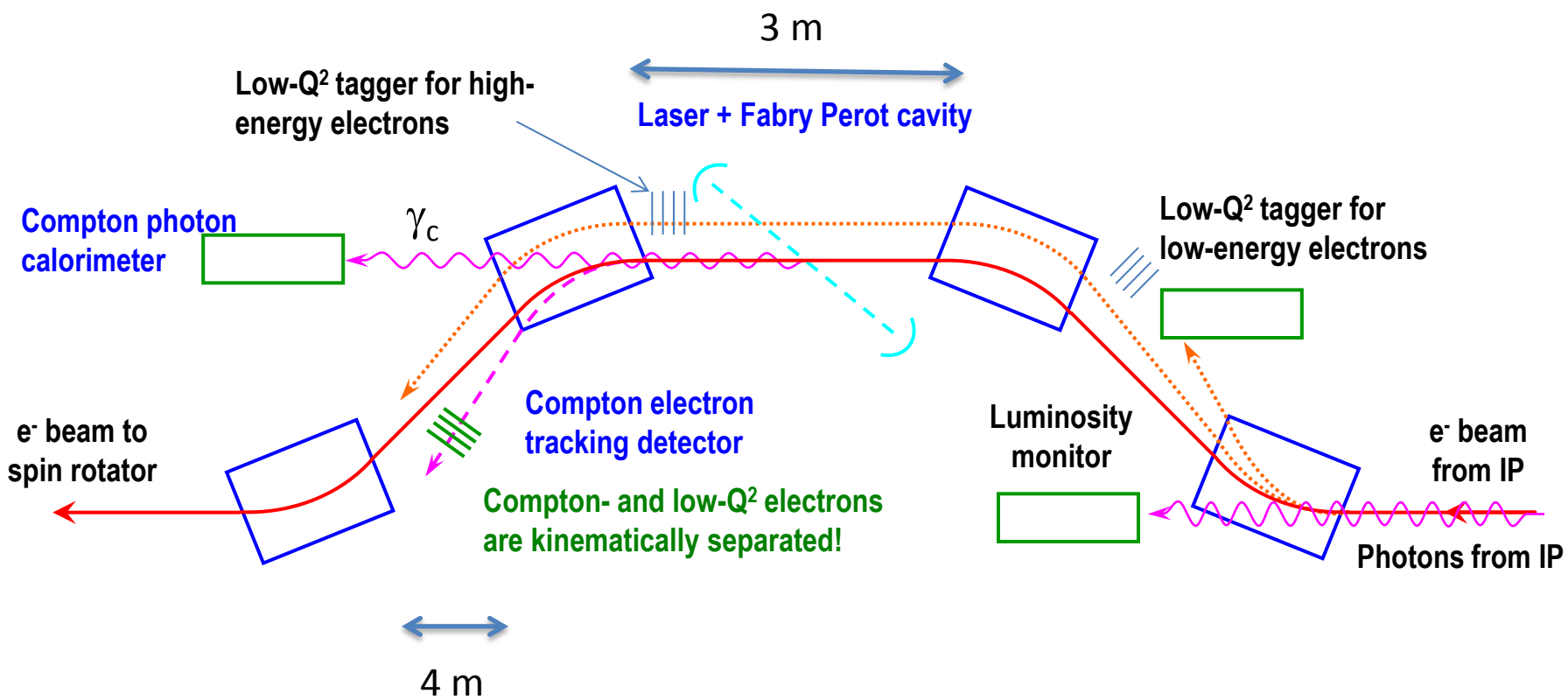

- Second IP will have a similar chicane optimized for electron detection
  - Goal is to push the uncertainty of the polarimeter towards 0.5 -1 %

Background for Compton

- Halo interacting before detector
- Synchrotron radiation
- RF radiation
- Bremsstrahlung

vacuum = 10^{-9} torr

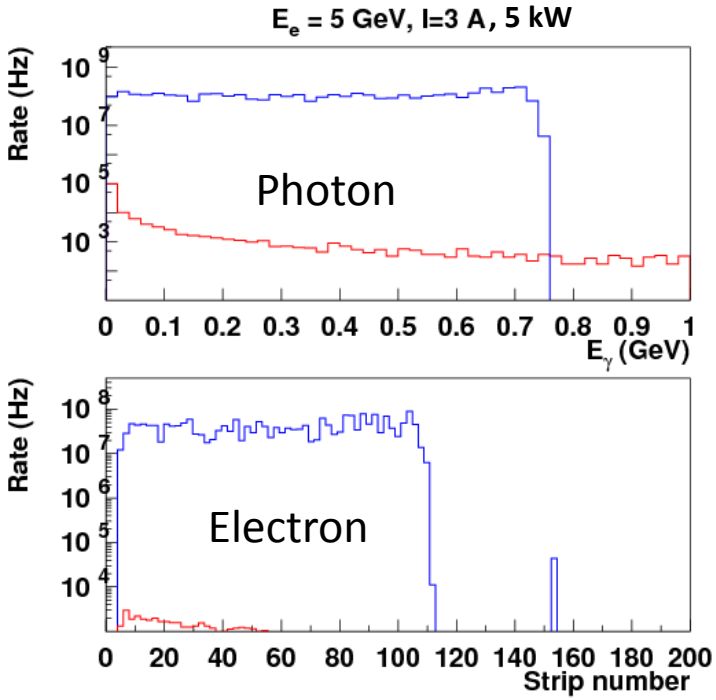

Requires at least 1 kW to have reasonable signal to background noise in photon detector

Detector rates

Assume 1000 W laser power , rates scale linearly with laser power

	Energy (GeV)	Rate (kHz/A/W)	Current (A)	Rate at 1 kW laser power (MHz)
MEIC	3	316	3	948
	5	298	3	894
	6	290	3	870
	7	283	3	849
	9	269	0.72	194
	10	258	0.72	186
eRHIC	10	258	0.050	12.9

eRHIC rate around 12 MHz at 1000 W laser power

Radiation damage

- Lower bound estimate (Compton signal only) continuous running at 1 kW (depends on beam size)

	Energy (GeV)	Current (A)	Rate (MHz)	Dose (rad per hour)
MEIC At 1% duty cycle laser	3	3	948	2.07E+05
	5	3	894	1.96E+05
	6	2	580	1.27E+05
	7	1.1	311.3	6.81E+04
	9	0.72	193.68	4.24E+04
	10	0.72	185.76	4.06E+04
eRHIC	10	0.05	12.9	2.82E+05

- Radiation damage significant at 1 kW power

Compton electrons acceptance

E (GeV)	k' Compton edge (MeV)	k' 0-Xing (MeV)	dp/p edge %	dp/p Xing %	Positition edge (cm)	Position 0 xing (cm)	Width (cm)	Nstrips
3	290.1609	152.4531	0.0967	0.0508	3.7141	1.9514	1.7627	70.5064
4	499.7302	266.5132	0.1249	0.0666	4.7974	2.5585	2.2389	89.5553
5	757.1794	409.6041	0.1514	0.0819	5.8151	3.1458	2.6694	106.7751
6	1058.2858	580.3218	0.1764	0.0967	6.7730	3.7141	3.0590	122.3588
7	1399.3094	777.3515	0.1999	0.1111	7.6762	4.2643	3.4119	136.4753
8	1776.9251	999.4605	0.2221	0.1249	8.5292	4.7974	3.7318	149.2732
9	2188.1676	1245.4918	0.2431	0.1384	9.3362	5.3141	4.0221	160.8833
10	2630.3832	1514.3588	0.2630	0.1514	10.1007	5.8151	4.2855	171.4213
11	3101.1905	1805.0394	0.2819	0.1641	10.8260	6.3012	4.5247	180.9898
12	3598.4460	2116.5717	0.2999	0.1764	11.5150	6.7730	4.7420	189.6799
13	4120.2152	2448.0496	0.3169	0.1883	12.1705	7.2312	4.9393	197.5728
14	4664.7480	2798.6187	0.3332	0.1999	12.7947	7.6762	5.1185	204.7410
15	5230.4569	3167.4728	0.3487	0.2112	13.3900	8.1087	5.2812	211.2496
16	5815.8985	3553.8502	0.3635	0.2221	13.9582	8.5292	5.4289	217.1566
17	6419.7578	3957.0313	0.3776	0.2328	14.5011	8.9382	5.5629	222.5146
18	7040.8342	4376.3351	0.3912	0.2431	15.0204	9.3362	5.6843	227.3706
19	7678.0290	4811.1171	0.4041	0.2532	15.5177	9.7235	5.7942	231.7672
20	8330.3353	5260.7664	0.4165	0.2630	15.9942	10.1007	5.8936	235.7429
21	8996.8282	5724.7041	0.4284	0.2726	16.4513	10.4680	5.9833	239.3325
22	9676.6568	6202.3809	0.4398	0.2819	16.8902	10.8260	6.0642	242.5676

Baseline mEIC electron detector

- Diamond strip detector
  - At least 5 cm long
  - 200 strips
  - 4 planes 5 cm long or 8 planes 2.5 cm (current technology)
  - Pros
    - No damage so far up to 10 Mrad at Jlab, expect 15 % loss of amplitude at 50 Mrad
    - Fast detector (potential for high rate and timing resolution)
    - Experience with Hall C
  - Cons
    - Small amplitude (might need electronics development)
- Roman pot
  - Need for RF shielding
  - Need detector shielding
  - Cooling
  - Detector motion
  - Detector far enough from beam to use roman pot (~1.5 cm = 15 sigma)
  - More convenient access to detector
  - Easier placement of electronic close to detector

Most likely would work for eRHIC too but need to input design parameters

Simulation / studies needed

- Update synchrotron to new design (layout / beam sizes)
- Compton event generator for signal to noise background, add halo model to full simulation
- Realistic beamline implementation to study signal to background
- Implement collimation and shielding
- Evaluate systematic error from Roman Pot window
- Model test stand
- Validate simulation with test stand results

Proposal deliverables

- Issues to address / deliverables
  - **Simulation**
    - Contribution of window of Roman pot to systematic
    - Implementation new chicane design synchrotron background
    - Detector background / collimation / shielding
  - **Test stand**
    - Ensuring detector response fast enough to measure different sources separately at 10.8 MHz and handle rates
      - Use of on board amplification / electronics for diamond and silicon
      - Check timing improvement
      - Radiation hardness of electronics
    - Radiation hardness of detector (detector should last at least one run period of a couple of months)
    - Ensure 1% measurement

Hall C Compton electron detector

- Diamond microstrip detector
- 250 μm thick 200 μm pitch
- 96 strips = 1.92 cm
- 4 planes
- 384 channels
- Detector -> Flex -> Electronics
- Vertical motion
- No sign of radiation damage after 10 Mrad

- Signal 3 time smaller than silicon detector
- About 9000 electrons

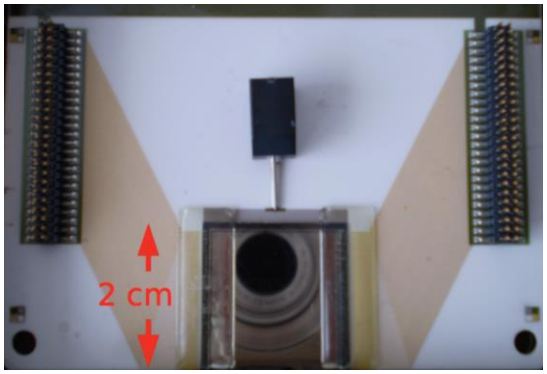

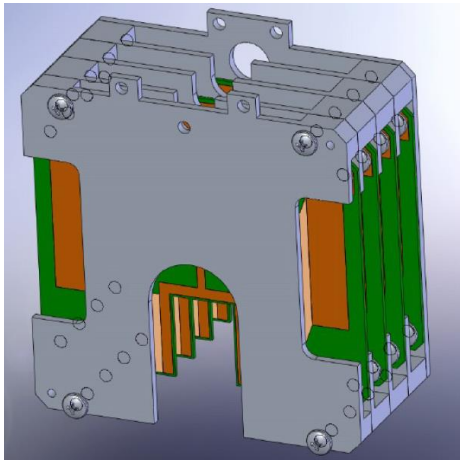

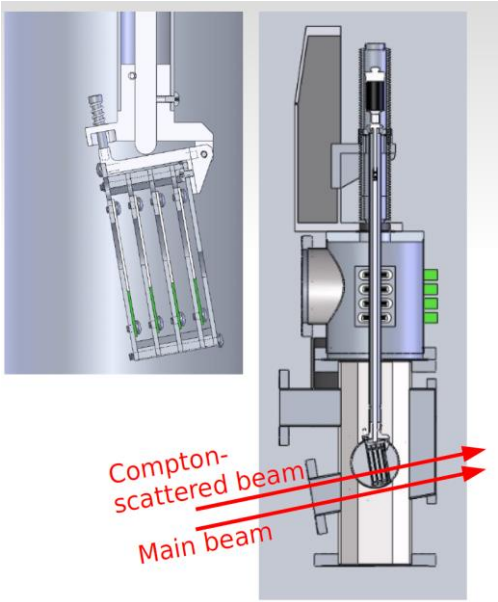

Test flange

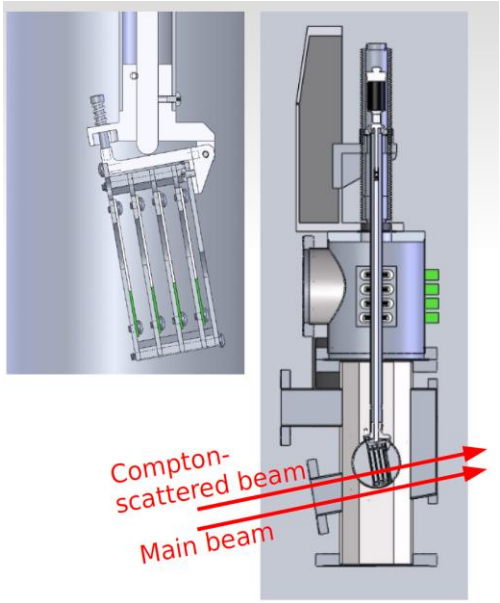

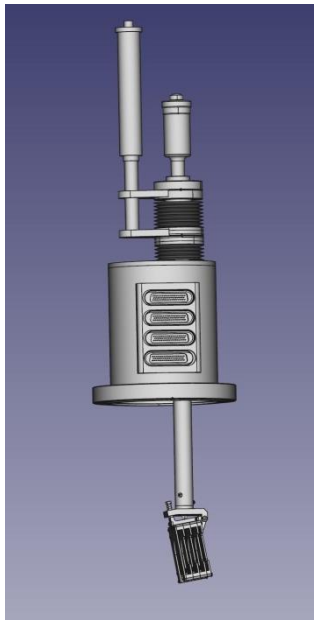

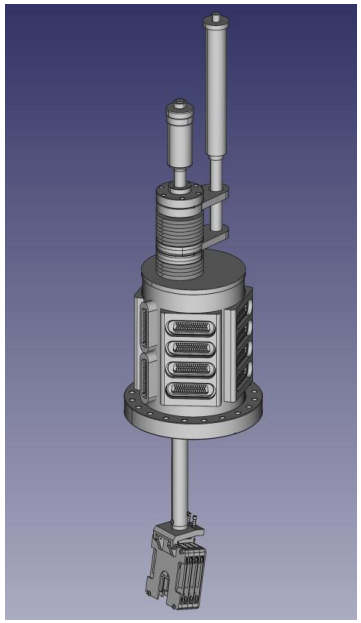

- Use successful Hall C design for Hall A
- Upgrade to 768 channels
- Add feedthrough for low voltage and gas or liquid cooling
- Allow test existing detectors in Hall A or C
  - 768 silicon detector
  - 384 diamond detector
- Possible 768 channels diamond detector
- More flexibility to carry out test in another Hall in one hall run use Compton for high precision measurement (Parity experiments)

Customized EIC top test flange

- 8 x 50 pins feedthrough on left side

- Vertical motion

- 8 x 50 pins feedthrough on right side

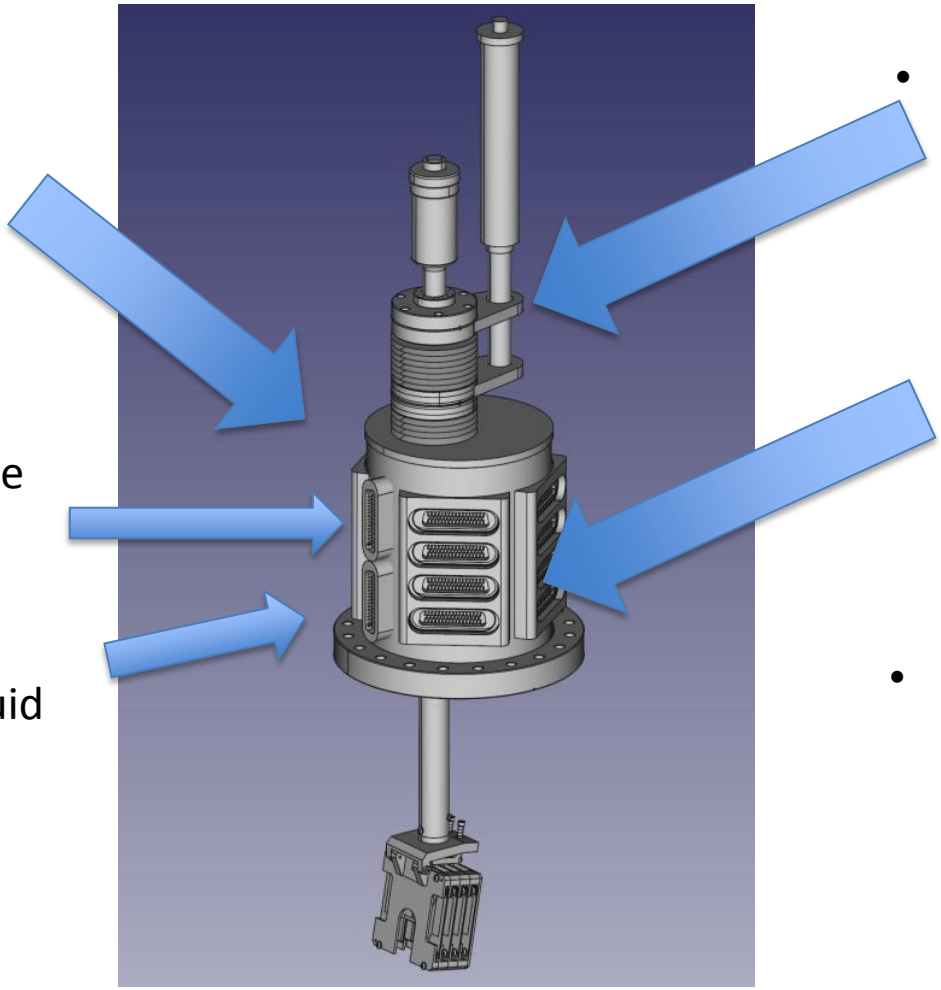

- 1 x 50 for low voltage and additionnal test signals

- Feedthrough for liquid or gas cooling

- Compatible with Hall A silicon and Hall C diamond

Electron detector electronics

- eRHIC
  - VMM1/2,FPHX
  - Triggered 10.8 MHz
- mEIC
  - Discriminator chips
    - IRPICS, MAROC, VMM1/2, SFE16
- Need to evaluate effect of pile up since Compton events are highly focused

FPHX shaping time 100 ns

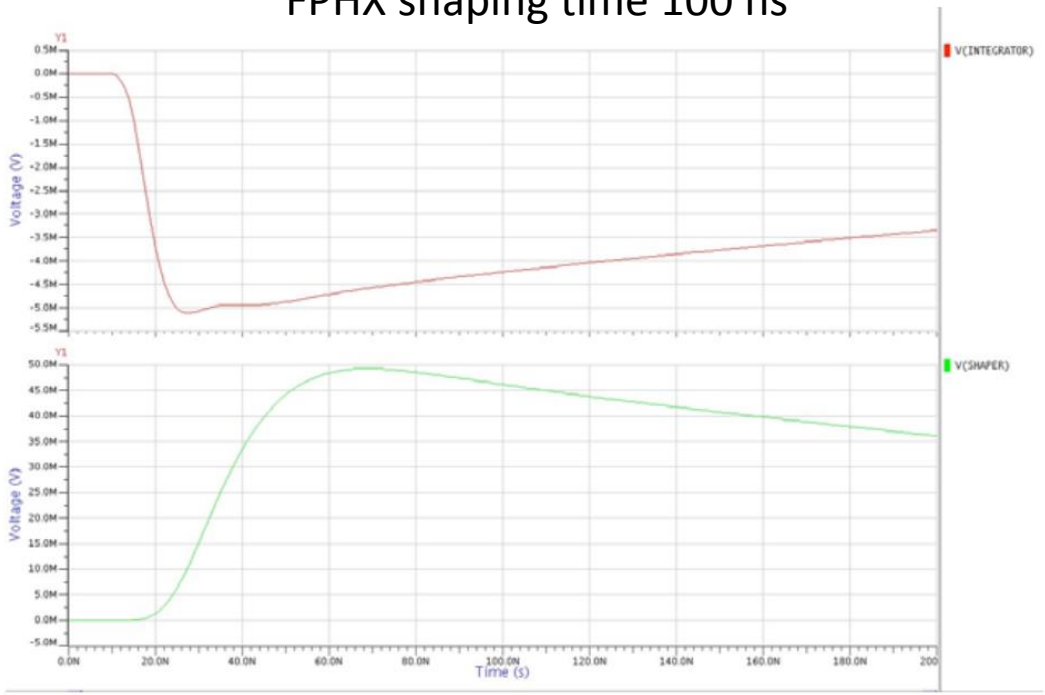

Plan for 1 MHz trigger rate

Parasitic test

- Parasitic while taking Compton data in parallel with experiments
  - Effect of thickness of window : data with several thickness of absorber
  - Improvement in timing with use of ASIC
  - Improvement of dark current / noise / radiation hardness with cooling
  - Radiation hardness

Timeline

- Year 1
  - Build lower chamber (15 K$)
  - Build ASIC test board / bench test performance (52.5 K$)
  - Postdoc simulation background, modelling (30 K$)
- Year 2
  - Build top test flange (58.5 K$)
  - Parasitic beam test with existing 768 channels silicon detector Parasitic beam test with existing 384 channels
  - diamond detector Postdoc simulation and testing (30 K$)
- Year 3
  - Procure and test 768 channels diamond detector(~77K$)
  - Postdoc : testing (30 K$)

Budget request

2016	Unit price K$	Quantity	Total K$
Electronics	5.00	4.00	20.00
Front end	10.00	1.00	10.00
Lower chamber	10.00	1.00	10.00
Detector holder	2.50	1.00	2.50
Test flange	10.00	1.00	10.00
Travel	5.00	1.00	5.00
Design	5.00	1.00	5.00
Post doc	25.00	1.00	25.00
		Total	87.50 K$
		With overhead 54.5 %	135.19 K$

Budget

2017	Unit price K$	Quantity	Total
Motion system	8.00	1.00	8.00
Feed through	2.25	18.00	40.50
Flange	10.00	1.00	10.00
Postdoc	25.00	1.00	25.00
Travel	5.00	1.00	5.00
		Total	88.5 K$
		Total with 3% inflation	91.16 K$
		With overhead 54.5%	140.83 K$

Manpower

- Jlab :
  - Alexandre Camsonne (Hall A/C Compton)
  - David Gaskell (Hall A/C Compton)
  - Paul Brinza (Engineering)
- University of Manitoba : Silicon Detector and Diamond detector
  - Juliette Mammei
- Mississipi State University : Diamond detector
  - Dipangkar Dutta
- Carnegie Mellon University : Photon detector
  - Greg Franklin
  - Brian Quinn

Conclusion

- mEIC Compton polarimeter location finalized in Low Q^2 chicane
- Continue simulation effort for background to narrow down laser solution and optimize background rate
- Proposal for test stand Hall A/Hall C
  - Contribution of window of Roman pot
  - Detector response fast enough to measure different sources separately
  - Use of on board electronics to improve timing
  - Radiation hardness of detector
  - Study of operation in high background rates
  - **1 % polarimetry capability ideal to test systematics**

- Might add proposals later for Compton photon detector and laser system R&D (pulsed Perot Fabry)

Backup

Collisions with Great Signal to Noise

Vertical beam position scan

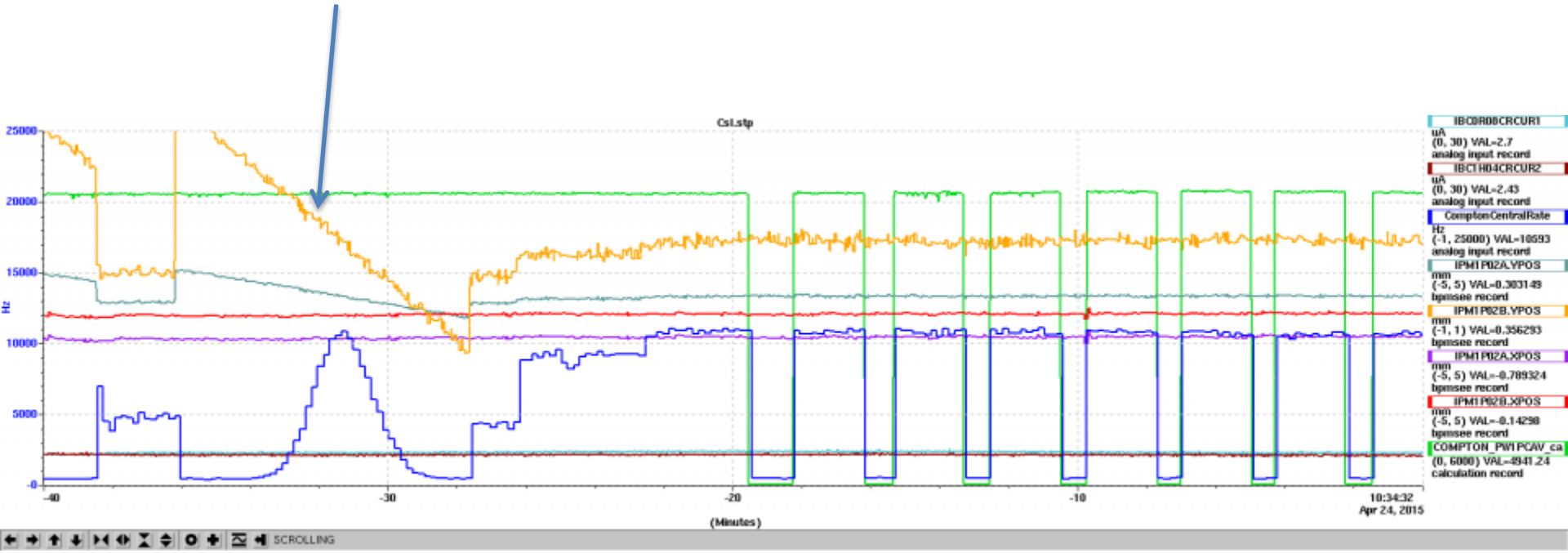

Friday morning – saw great signal to noise. Compton rates close to simple prediction (4 kHz/μA)

Compton polarimeter photon detector

- Lead tungstate calorimeter instead of GSO
- 2x2 matrix couple to one PMT
- FADC Integrating method to be tested at high energy

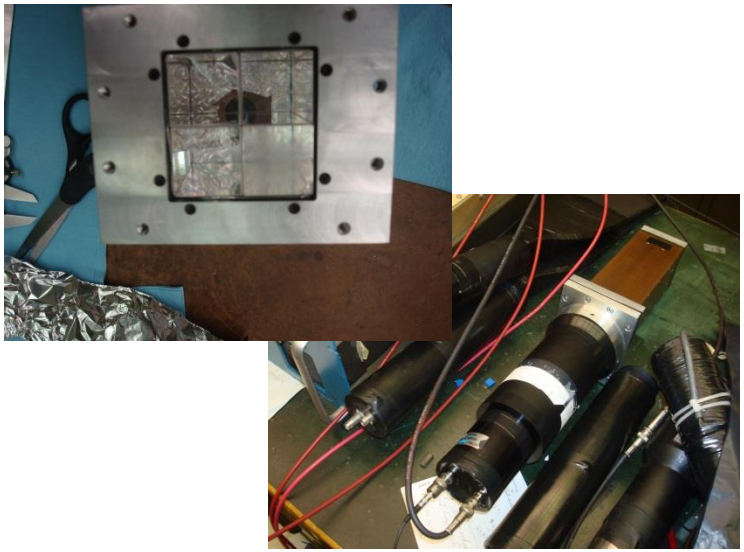

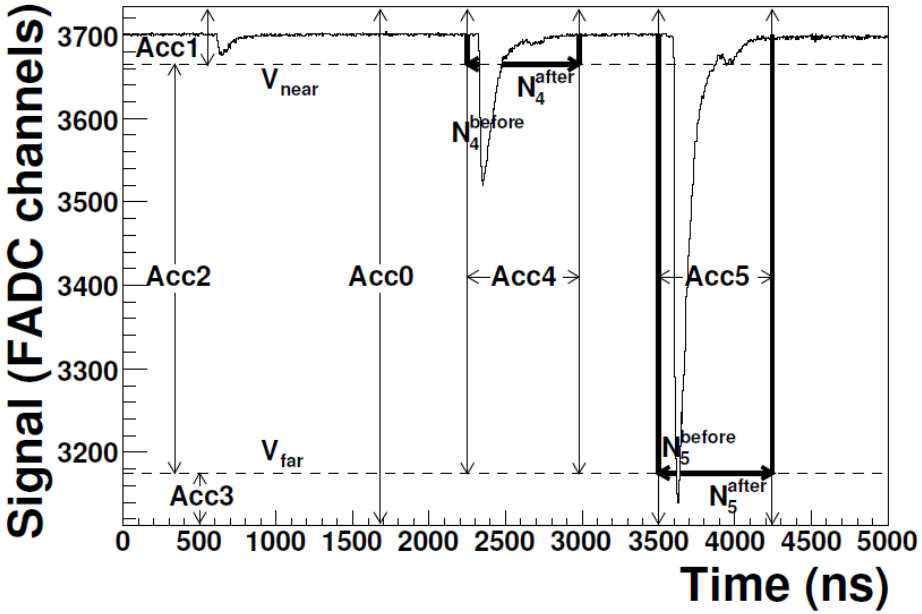

First Compton photons after upgrade

Initially, backgrounds were not terrible, but still too large to see collisions – tuning required

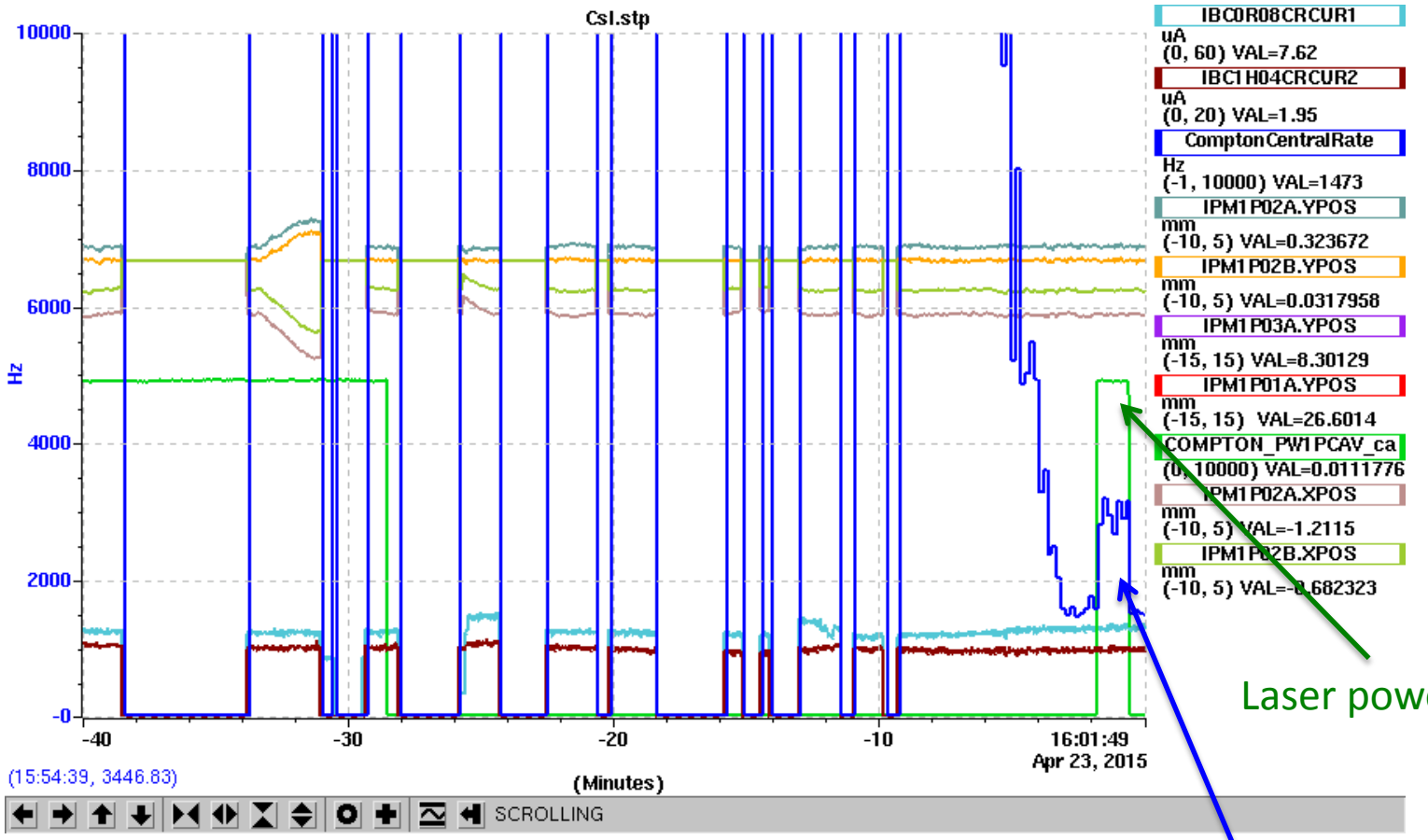

https://logbooks.jlab.org/entry/3334743

Photon Detector Table Scan

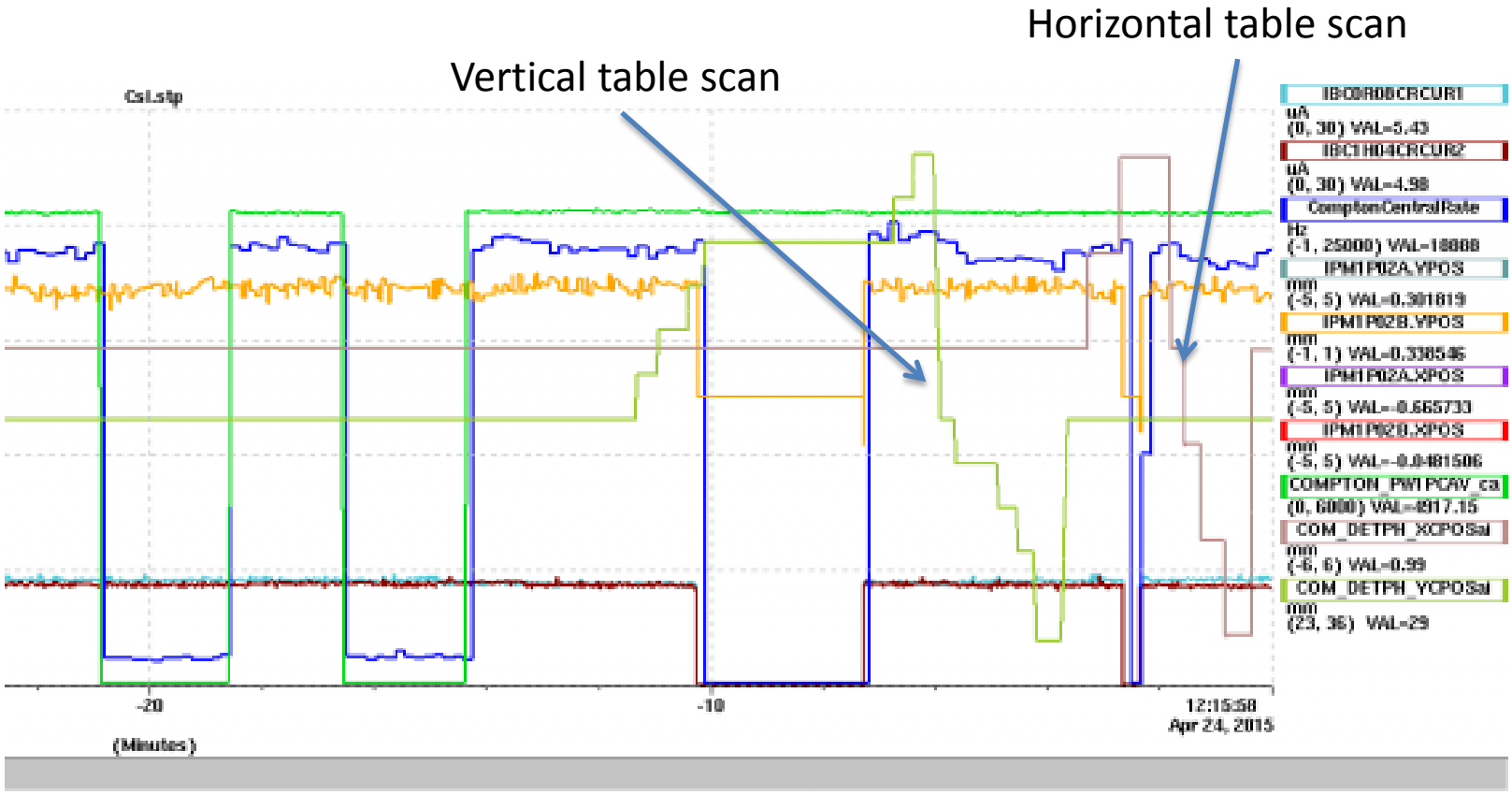

Scanned photon detector position +/- 5 mm in x and y

→ Detector size = 6 cm x 6 cm

→ This such shows we aren't grossly misaligned

Performance of MEIC Baseline Design

- For a full acceptance detector

CM energy	GeV	21.9 **(low)**		44.7 **(medium)**		63.3 **(high)**	
		p	*e*	*p*	*E*	*p*	*e*
Beam energy	GeV	30	4	100	5	100	10
Collision frequency	MHz	476		476		159	
Particles per bunch	10^{10}	0.66	3.9	0.66	3.9	2.0	2.8
Beam current	A	0.5	3	0.5	3	0.5	0.72
Polarization	%	>70%	>70%	>70%	>70%	>70%	>70%
Bunch length, RMS	cm	2.5	1.2	1	1.2	2.5	1.6
Norm. emitt., vert./horz.	μm	0.5/0.5	74/74	1/0.5	144/72	1.2/0.6	1152/576
Horizontal and vertical β^*	cm	3	5	2/4	2.6/1.3	5/2.5	2.4/1.2
Vert. beam-beam param.		0.01	0.02	0.006	0.014	0.002	0.013
Laslett tune-shift		0.054	small	0.01	small	0.01	small
Detector space, up/down	m	3.6/7	3/3.2	3.6/7	3/3.2	3.6/7	3/3.2
Hour-glass (HG) reduction		0.89		0.88		0.73	
Lumi./IP, w/HG, 10^{33}	$cm^{-2}s^{1}$	**1.9**		**4.6**		**1.0**	

- For a high(er) luminosity detector

Horizontal and vertical β^*	cm	1.2	2	1.6 / 0.8	1.6 / 0.8	2 /1	1.6 / 0.8
Vert. beam-beam param.		0.01	0.02	0.004	0.021	0.001	0.021
Detector space, up/down	m	±4.5	±3	±4.5	±3	±4.5	±3
Hour-glass (HG) reduction		0.67		0.74		0.58	
Lumi./IP, w/HG, 10^{33}	$cm^{-2}s^{1}$	**3.5**		**7.5**		**1.4**	

Electron Polarization

- Electron polarization design:
  - Vertically polarized (>85%) electron beam from CEBAF
  - Vertical polarization in the arcs and longitudinal at collision points
  - Spin rotator for the polarization rotation
  - Compton polarimeter provides non-invasive measurements of polarization
  - Average electron polarization reaches above 70%

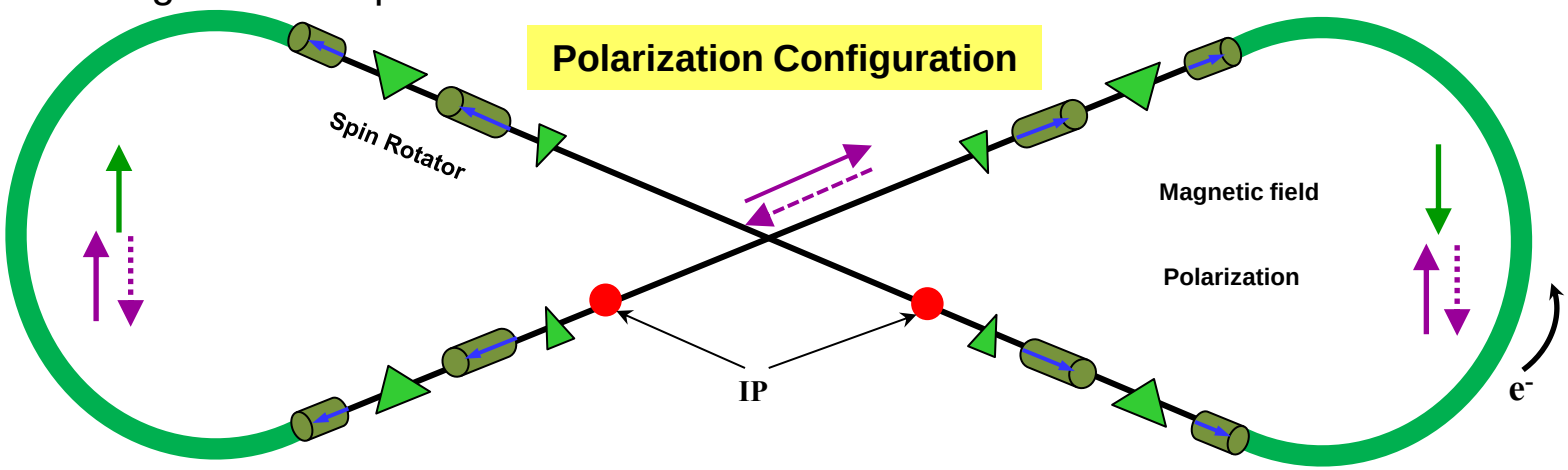

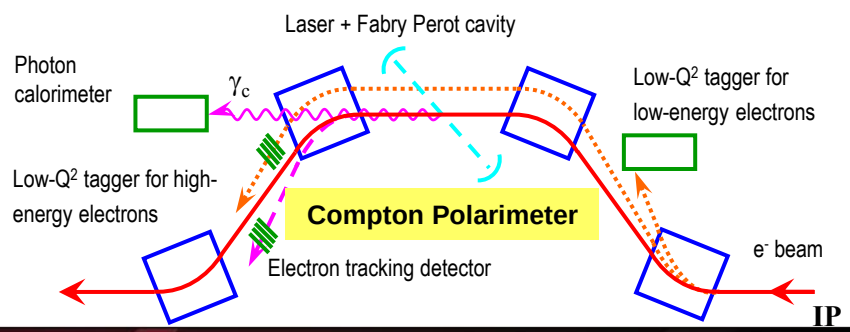

Energy (GeV)	3	5	7	9	10
Estimated Pol. Lifetime (hours)	66	5.2	2.2	1.3	0.8

Cavity Design Considerations

2 cm cavity aperture

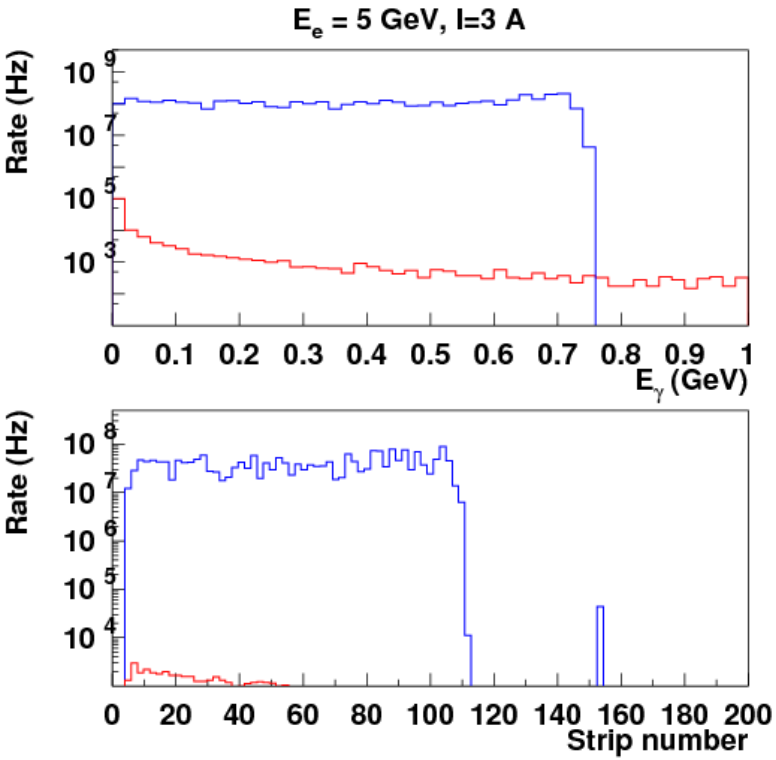

Photon detector signal

Electron detector signal

1 cm cavity aperture

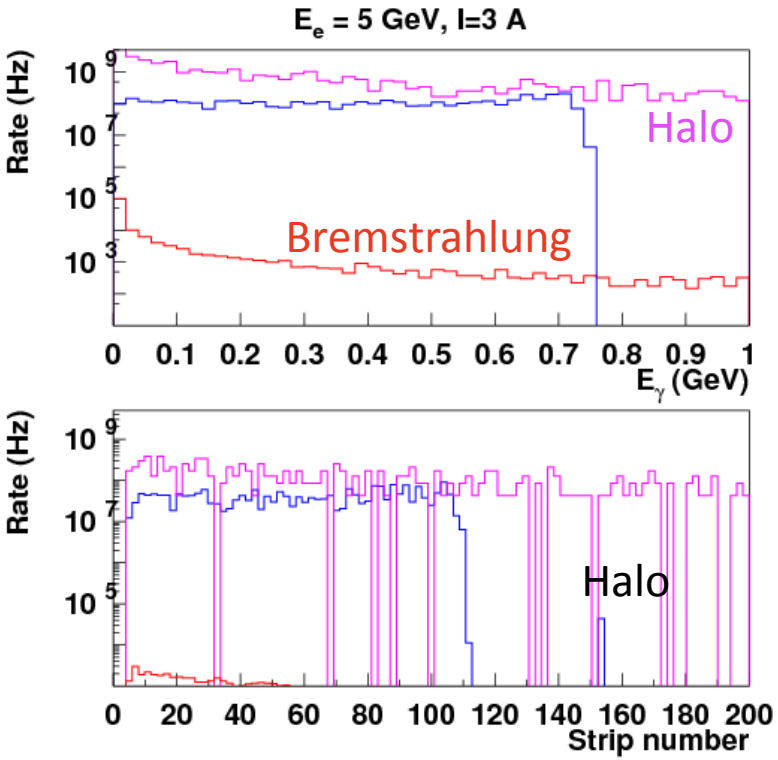

- Electron detector further from beam at higher energy → smaller backgrounds
- Background is worse for photon detector than elecron detector
- Need to pay attention to apertures which can generate background from halo
- Understanding halo important → work with CASA to develop reliable model

Halo Model

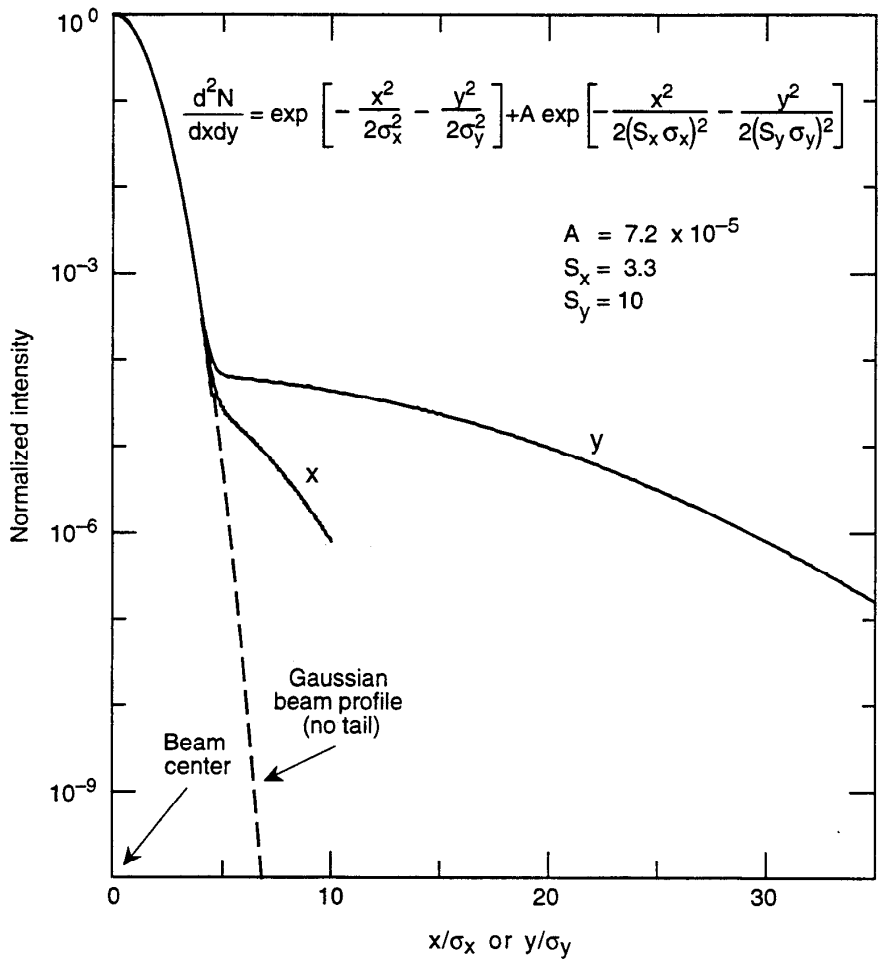

Fig. 4-51. Plot of the beam profiles assumed for the calculation of detector backgrounds due to synchrotron radiation. The integral of the background Gaussian is about 0.25% of the main beam Gaussian.

Halo Model

$$\frac{dN}{dxdy} = e^{-\frac{x^2}{2\sigma_x^2} - \frac{y^2}{2\sigma_y^2}} + Ae^{-\frac{x^2}{2(S_x\sigma_x)^2} - \frac{y^2}{2(S_y\sigma_y)^2}}$$

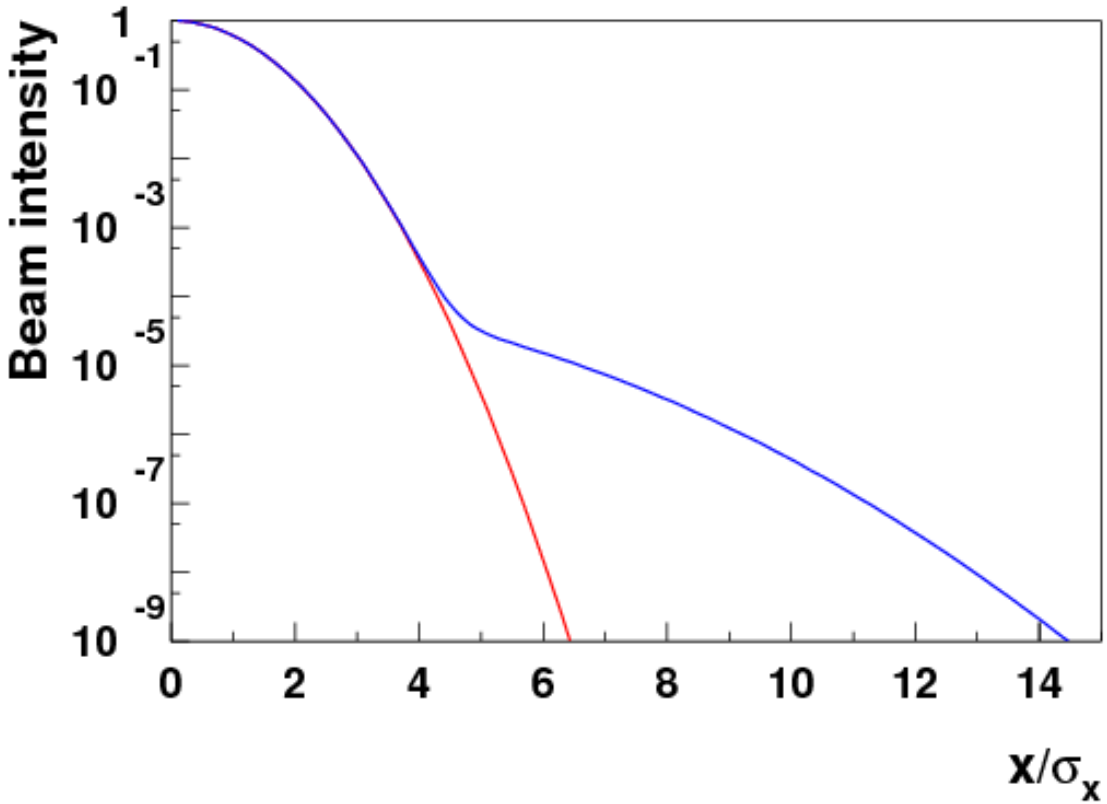

$S_x=S_y=3.0$

A=1.1E-4

Integrated strength=0.1%

Synchrotron background

Beam pipe options	1 mm Be, 2 mm H_2O, 1 mm Be		10 μm Au, 1 mm Be, 2 mm H_2O, 1 mm Be		25 μm Au, 1 mm Be, 2 mm H_2O, 1 mm Be	
5 GeV e- beam 25 mrad inc. angle 4.830×10^{13} γs/bun. inc. 5.498×10^{13} keV/bun. inc.		Fraction with solid ang. cut applied (3.46×10^{-4})		Fraction with solid ang. cut applied (3.46×10^{-4})		
Frac. of inc. γs through bp	0.003715	1.285×10^{-6}	1.184×10^{-5}	4.097×10^{-9}		
Frac. of inc. enr. through bp	0.01626	5.626×10^{-6}	5.764×10^{-5}	1.994×10^{-8}		
11 GeV e- beam 25 mrad inc. angle 6.371×10^{12} γs/bun. inc. 7.729×10^{13} keV/bun. inc.				Fraction with solid ang. cut applied (2.103×10^{-2})		Fraction with solid ang. cut applied (2.254×10^{-3})
Frac. of inc. γs through bp			0.0103	2.166×10^{-4}	4.467×10^{-3}	1.007×10^{-5}
Frac. of inc. enr. through bp			0.0267	5.615×10^{-4}	0.0116	2.615×10^{-5}

Need beam pipe with windows and cooling

Default option for detector to shield from synchrotron and RF is **roman pot** for Compton Electron Detector

Roman Pot design

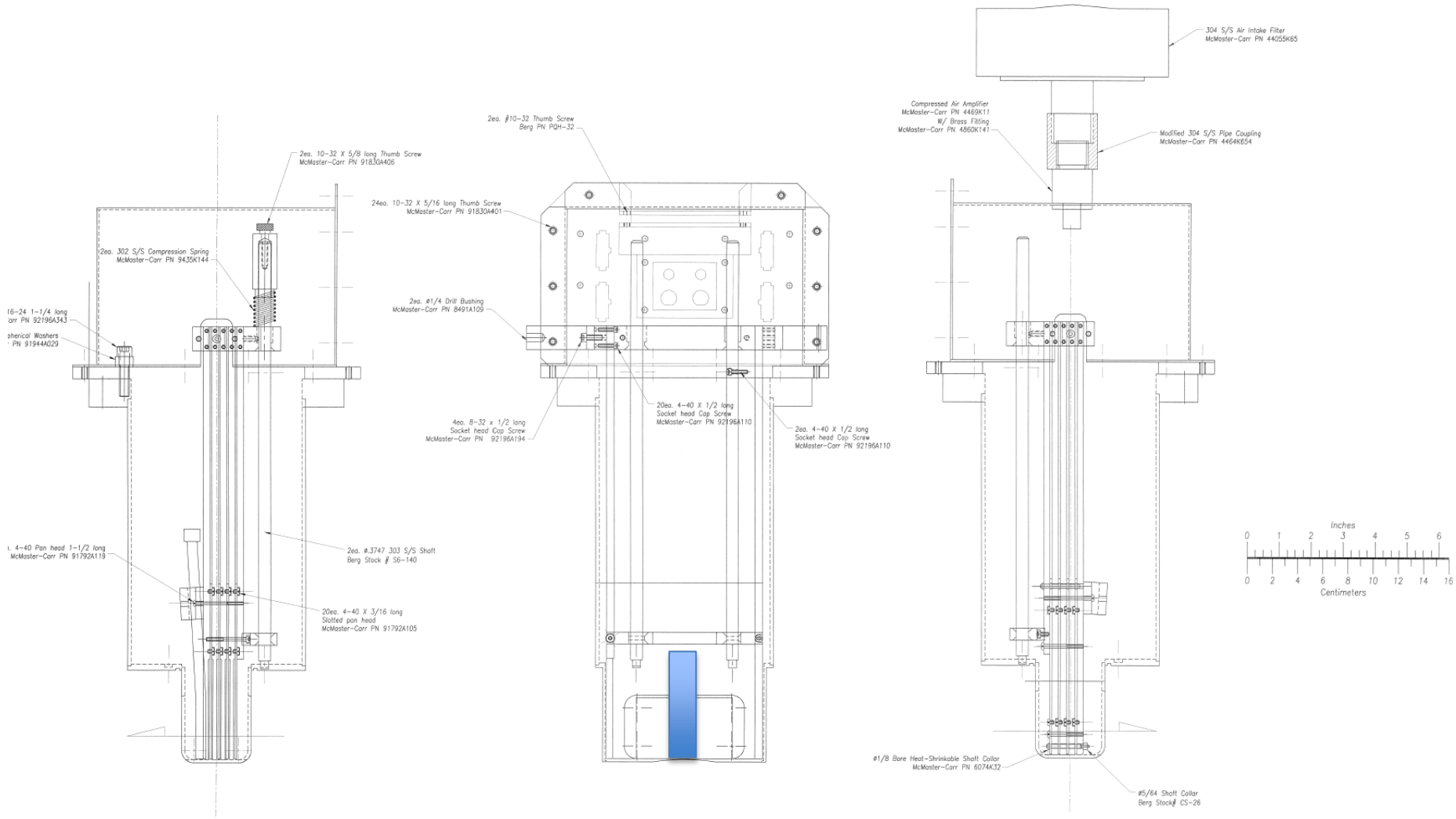

Diamond properties

CVD Diamond

	Silicon	Diamond
Band Gap (eV)	1.12	5.45
Electron/Hole mobility (cm2/Vs)	1450/500	2200/1600
Saturation velocity (cm/s)	0.8x107	2x107
Breakdown field (V/m)	3x105	2.2x107
Dielectric Constant	11.9	5.7
Displacement energy (eV)	13-20	43
e-h creation energy (eV)	3.6	13
Av. e-h pairs per MIP per micron	89	36
Charge collection distance (micron)	full	~250

Low leakage current, shot noise

Fast signal collection

Low capacitance, noise

Radiation hardness

Smaller signal

4

Courtesy of R. Wallny (UCLA)

Diamond properties

Radiation Hardness

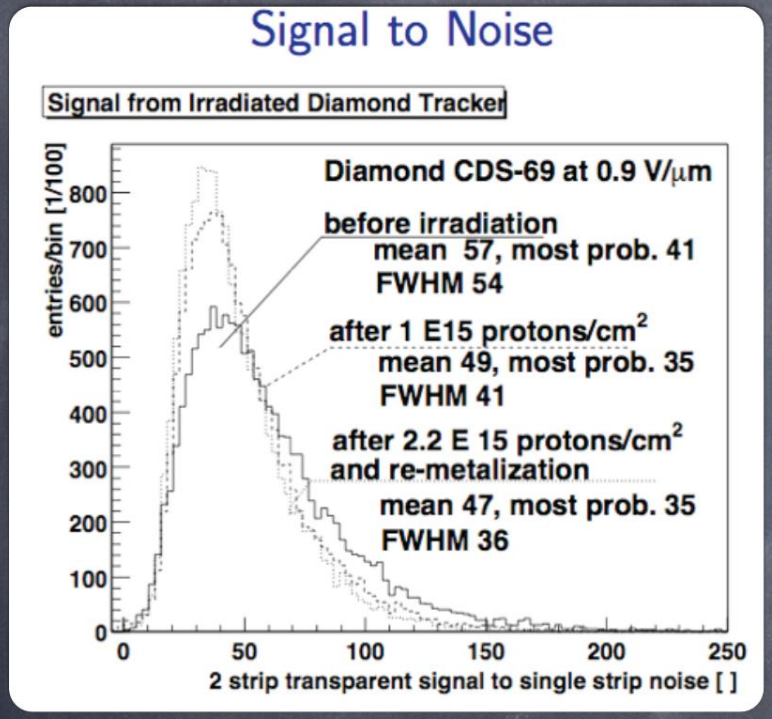

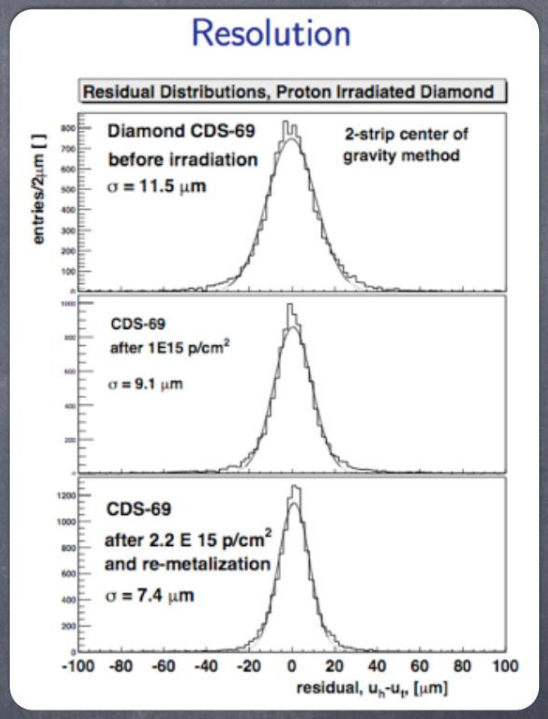

Little change in S/N after exposure of ~5 Mrad

15% change in S/N after an exposure of ~50 Mrad

Improvements in resolution and reduced dark current after irradiation

Si 50% change in S/N after exposure of ~3 Mrad

Courtesy of R. Wallny (UCLA) & H. Kagan (OSU)

Budget request diamond option

2018	Unit price K$	Quantity	Total (K$)
Detector holder	2.50	1.00	2.50
Diamond	12.80	4.00	51.20
Flex	4.00	1.00	4.00
Postdoc	25.00	1.00	25.00
Travel	5.00	1.00	5.00
Electronics	20.00	1.00	20.00
		Total	107.7
		Total With 3% inflation	114.26 K$
		including overhead 54.5%	176.53 K$

Hall A Compton electron detector
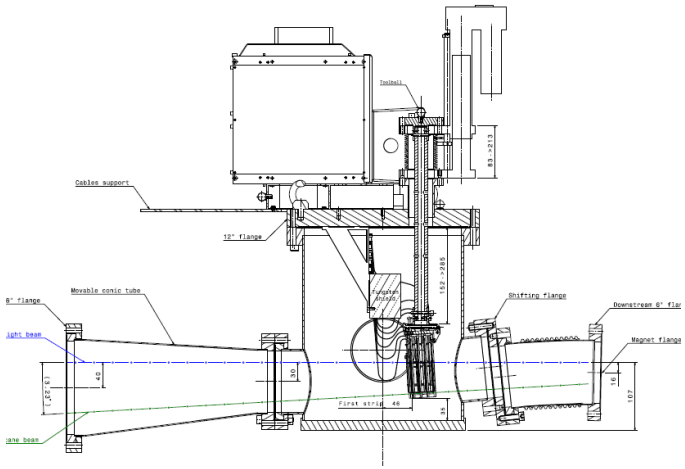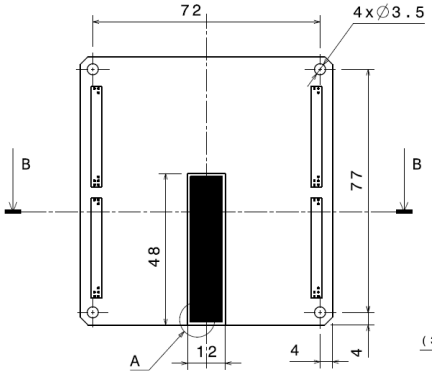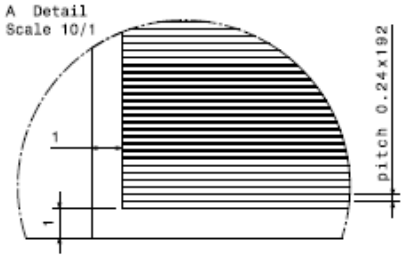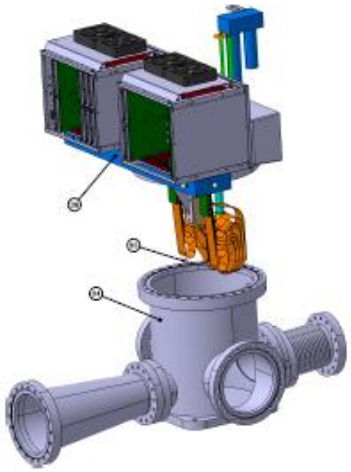
- Silicon microstrip detector
- 500 μm thick 250 μm thick
- 192 strips = 4.8 cm
- 4 planes
- 768 channels
- Vertical motion
- Detector -> Flex -> PCB -> Electronics