A pre-shower detector for forward electromagnetic calorimeters

W.K. Brooks, S. Kuleshov, BNL, May 17, 2012

A pre-shower detector for forward electromagnetic calorimeters

We are considering the pre-shower for the central part of the Electron-forward Electromagnetic Calorimeter (EFEC)

The proposed pre-shower is for:

1. Precise particle coordinate measurement on the face of a calorimeter.
2. And for the particle recognition:

- $\pi^0 \rightarrow \gamma\gamma$ identification for P~10 GeV
- Distinguishing single γ from π^0 and e
- e^- from π^- and e^+ from π^+

Crystals for HEP (from Ren-Yuan Zhu, California Institute of Technology)

Crystal	NaI(Tl)	CsI(Tl)	CsI(Na)	CsI	BaF_2	CeF_3	BGO	PWO(Y)	LSO(Ce)
Density (g/cm³)	3.67	4.51	4.51	4.51	4.89	6.16	7.13	8.3	7.40
Melting Point (ºC)	651	621	621	621	1280	1460	1050	1123	2050
Radiation Length (cm)	2.59	1.86	1.86	1.86	2.03	1.70	1.12	0.89	1.14
Molière Radius (cm)	4.13	3.57	3.57	3.57	3.10	2.41	2.23	2.00	2.07
Interaction Length (cm)	42.9	39.3	39.3	39.3	30.7	23.2	22.8	20.7	20.9
Refractive Index [a]	1.85	1.79	1.95	1.95	1.50	1.62	2.15	2.20	1.82
Hygroscopicity	Yes	Slight	Slight	Slight	No	No	No	No	No
Luminescence [b] (nm) (at peak)	410	550	420	420 310	300 220	340 300	480	425 420	402
Decay Time [b] (ns)	245	1220	690	30 6	650 0.9	30	300	30 10	40
Light Yield [b,c] (%)	100	165	88	3.6 1.1	36 4.1	7.3	21	0.3 0.1	85
d(LY)/dT [b] (%/ ºC)	-0.2	0.4	0.4	-1.4	-1.9 0.1	0	-0.9	-2.5	-0.2
Experiment	Crystal Ball	BaBar BELLE BES III	-	KTeV	(L*) (GEM) TAPS	-	L3 BELLE	CMS ALICE PANDA	SuperB

a. at peak of emission; b. up/low row: slow/fast component; c. QE of readout device taken out.

LSO/LYSO crystals and a read out with WLS fibers and SiPMs.

Three basic components of the pre-shower:

- LSO crystals production began in 1996 by CTI (Knoxville), this is the basic type of crystals (pixels array) for a modern PET.
- SiPMs were developed in last 12 years and it is a very promising photo sensor for HEP now
- WLS fiber is a tool for a uniform light collection from large area scintillators

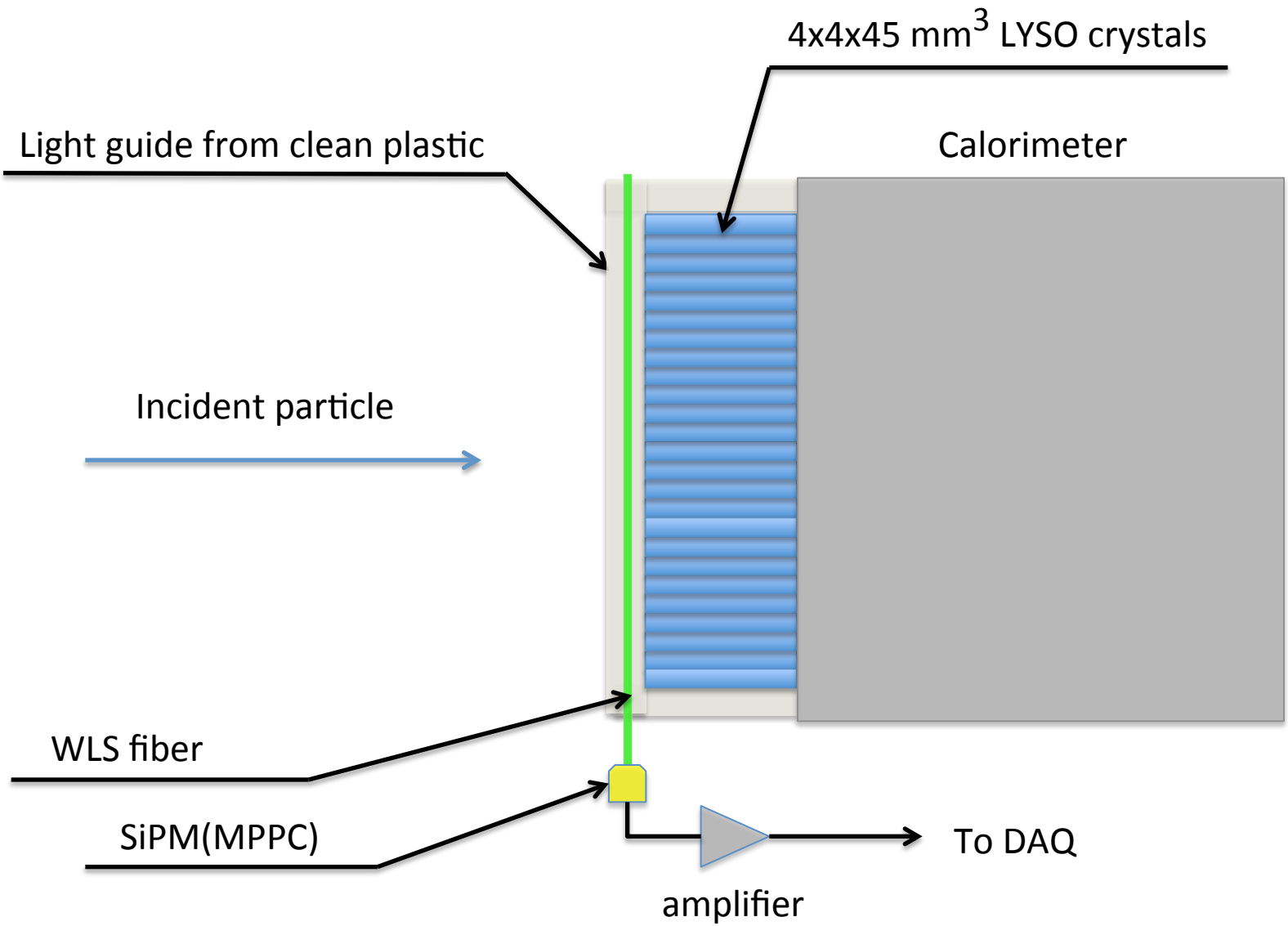

2D pre-shower with LSO/LYSO crystals

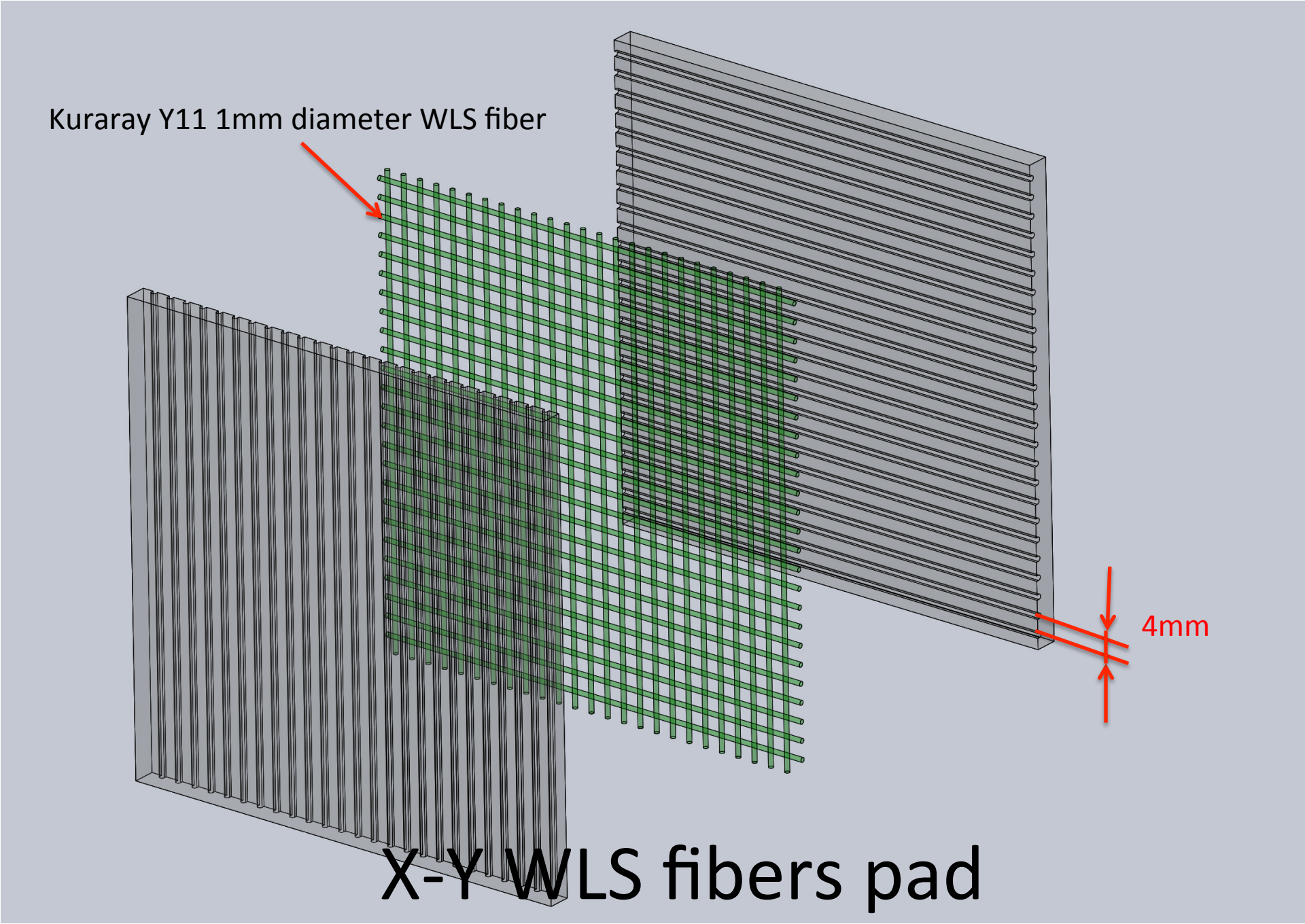

X-Y WLS fibers pad

Elements of the pre-shower.

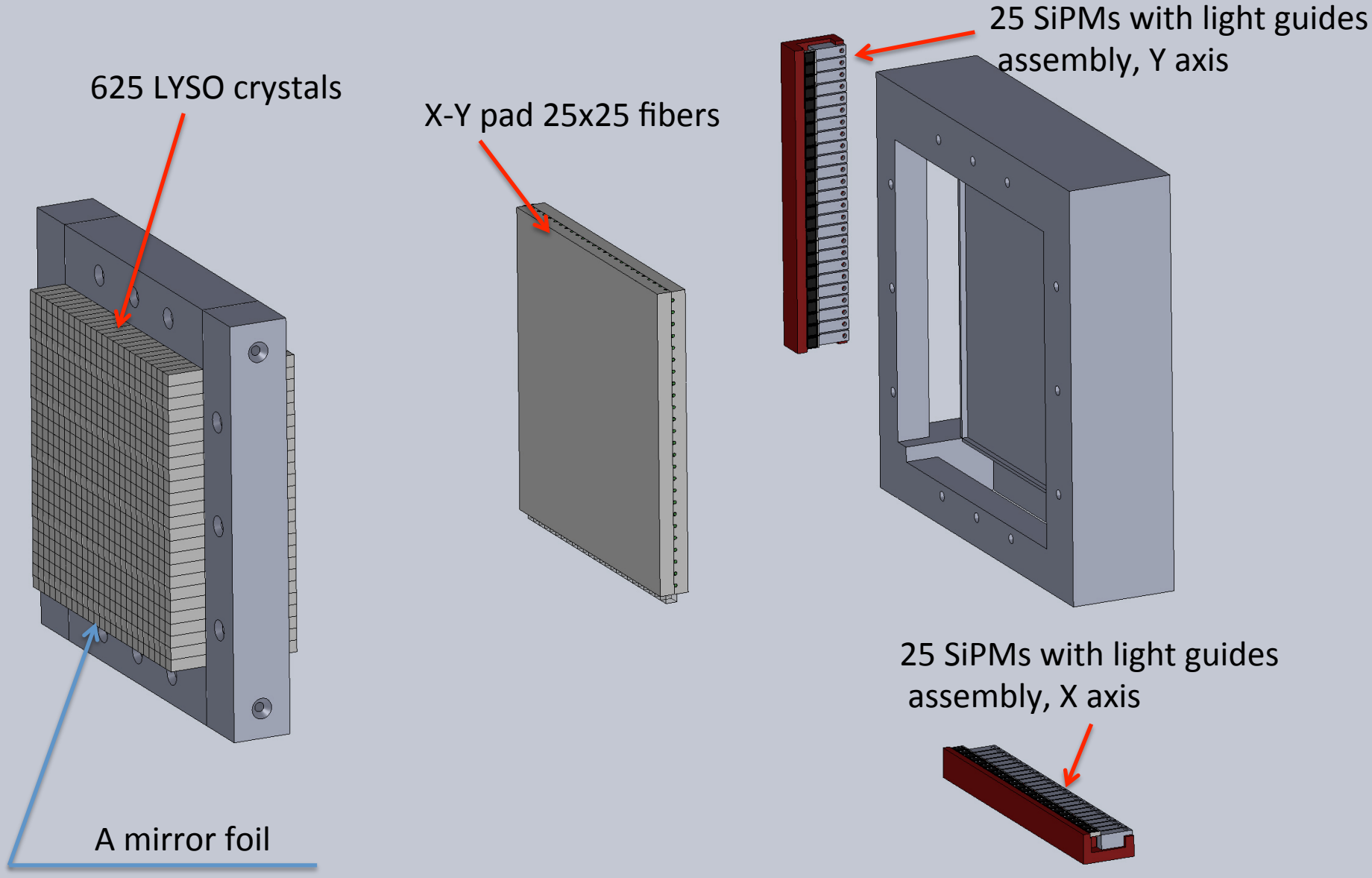

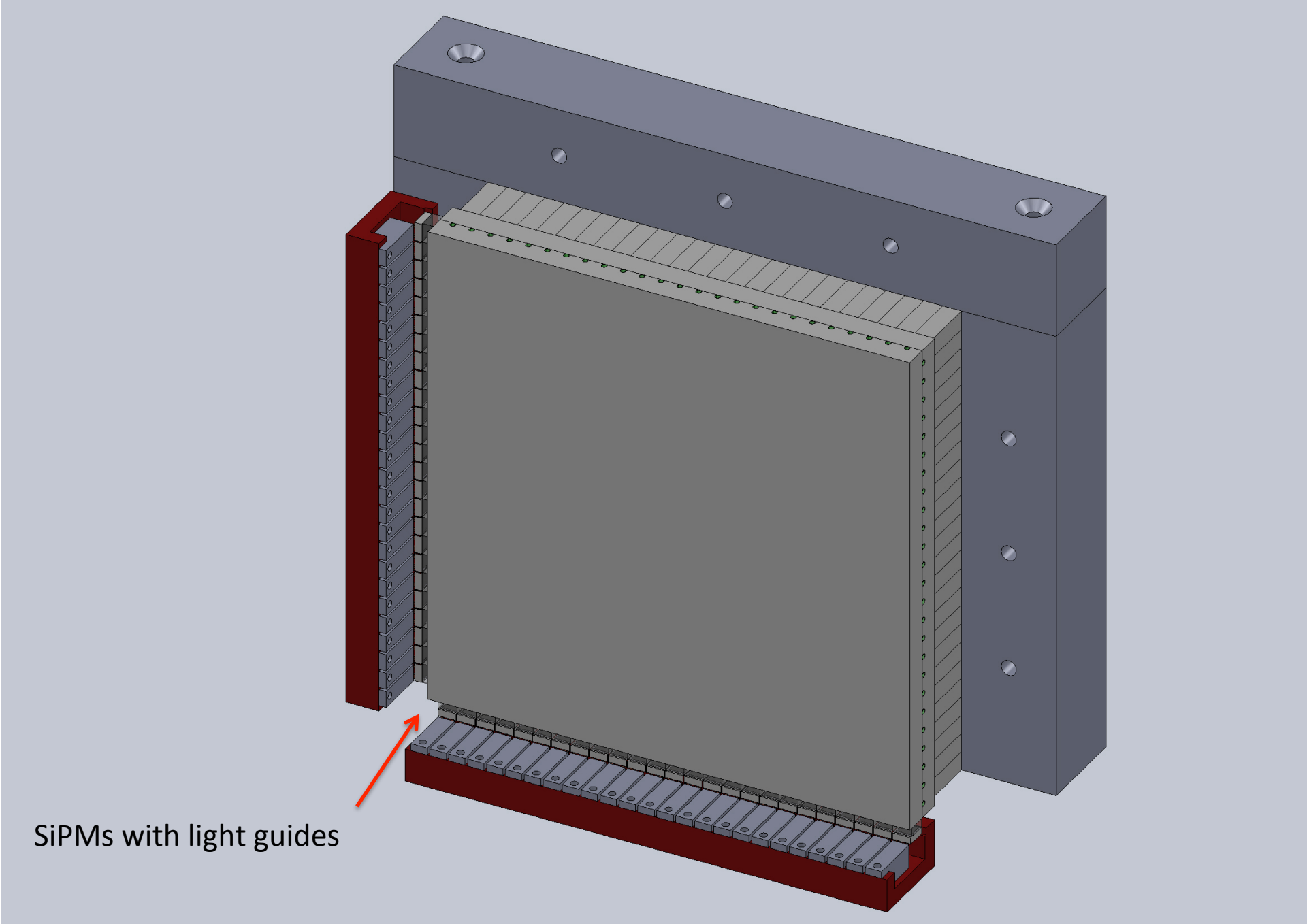
SiPMs with light guides

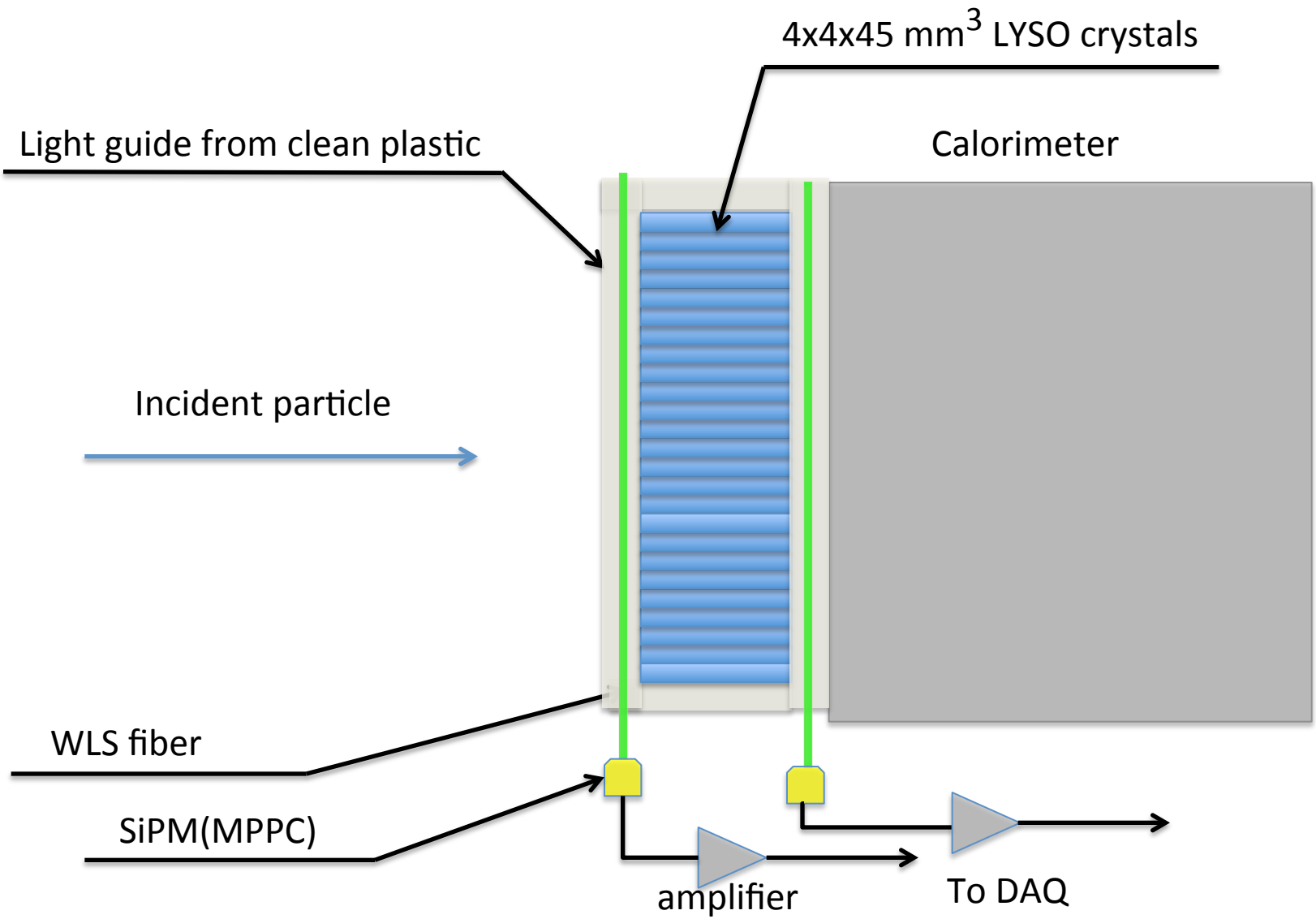

3D pre-shower with LSO/LYSO crystals

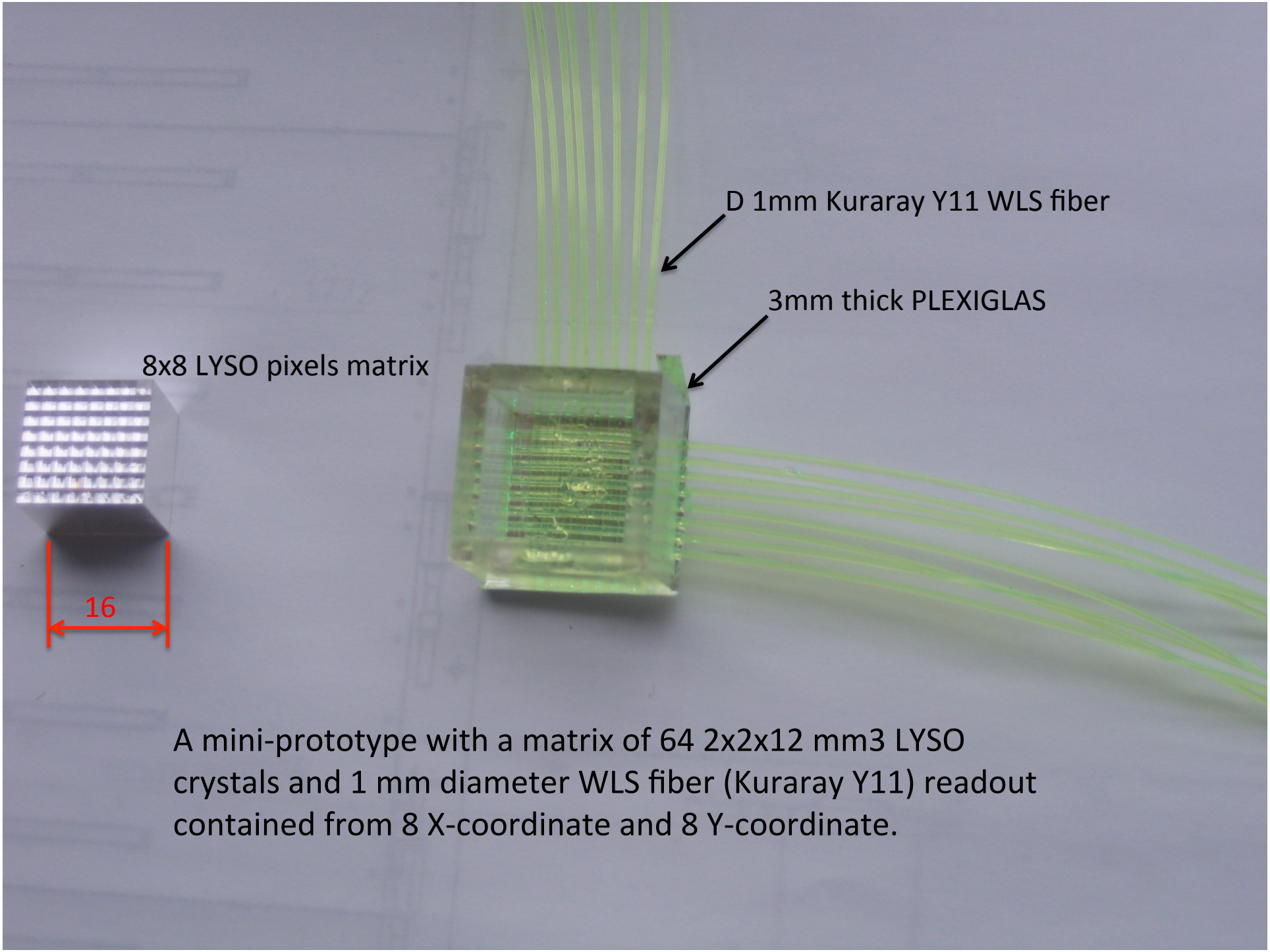

A mini-prototype with a matrix of 64 2x2x12 mm3 LYSO crystals and 1 mm diameter WLS fiber (Kuraray Y11) readout contained from 8 X-coordinate and 8 Y-coordinate.

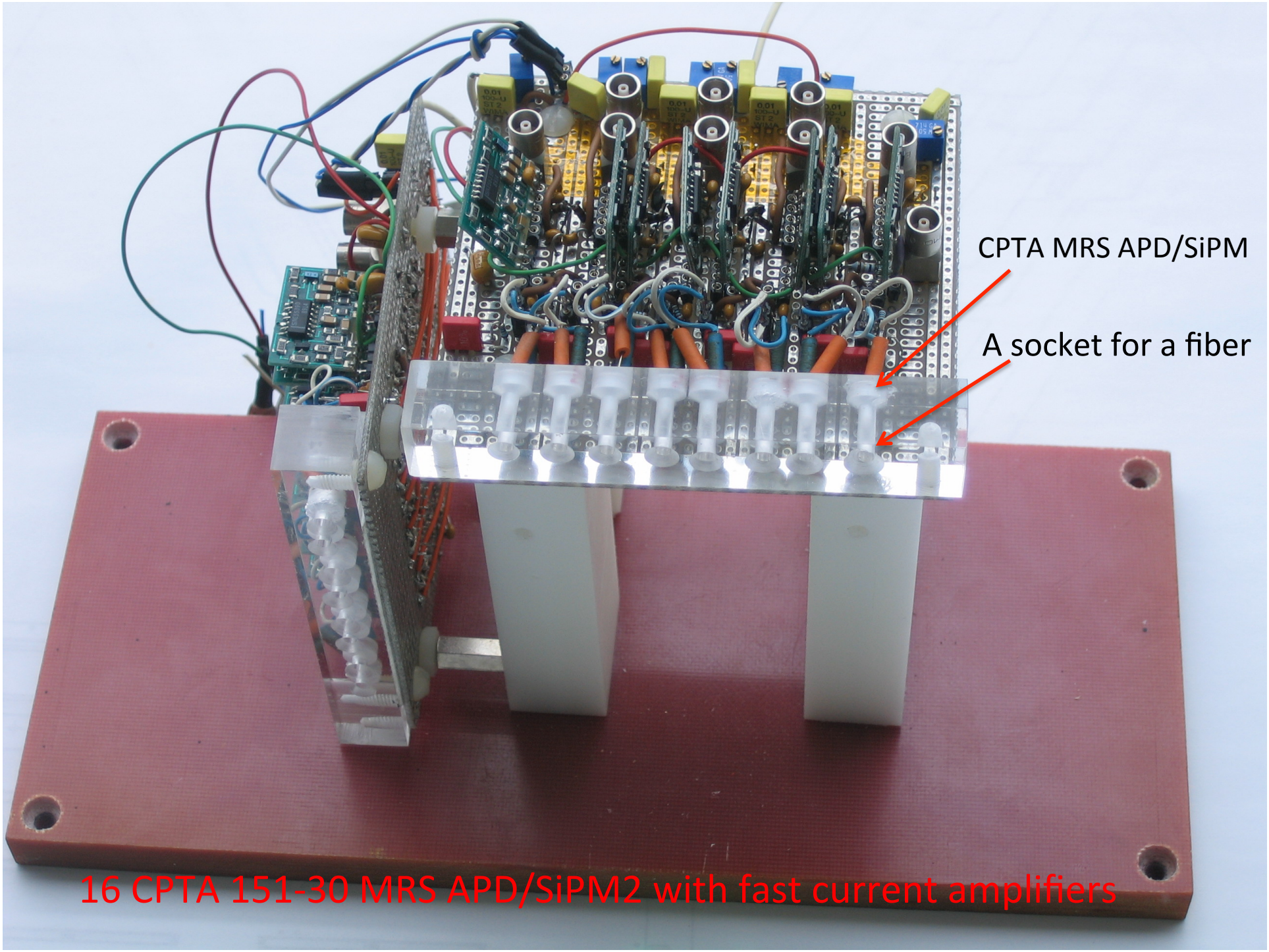
CPTA MRS APD/SiPM
A socket for a fiber
16 CPTA 151-30 MRS APD/SiPM2 with fast current amplifiers

The mini-prototype is in a dark box.

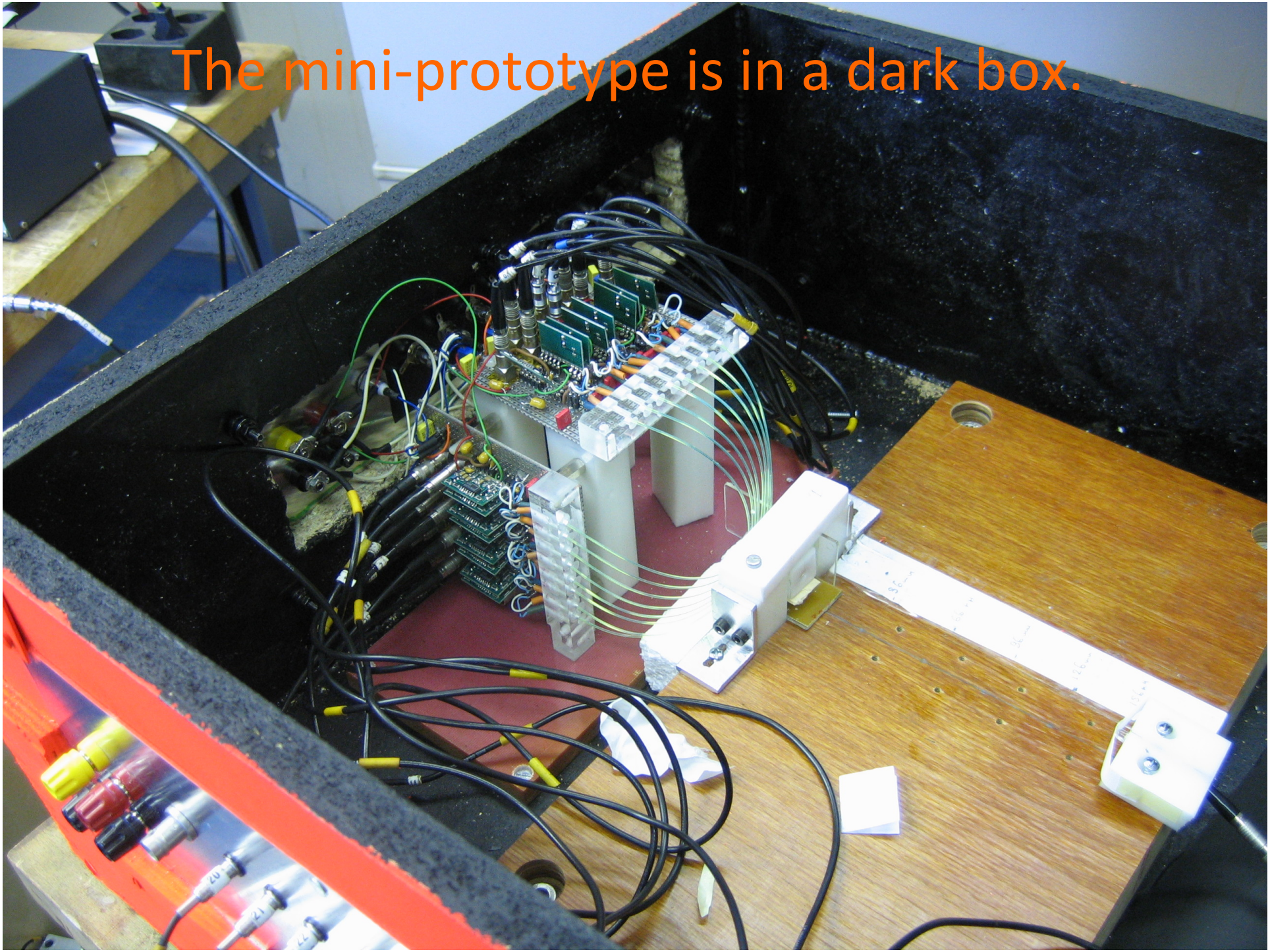

Test of the mini-prototype with 1μCi Cs-137 (0.662 MeV)

176-Lu is a naturally radioactive β emitter:A ~ 39 Bq/g; β-decay followed by a γ-cascade)

The internal radiation of LYSO with energy 88,202 and 307KeV

Sum of amplitudes from all channels. All channels were calibrated with 1 ph.e. peak position. X axis has a numbered photoelectrons scale.

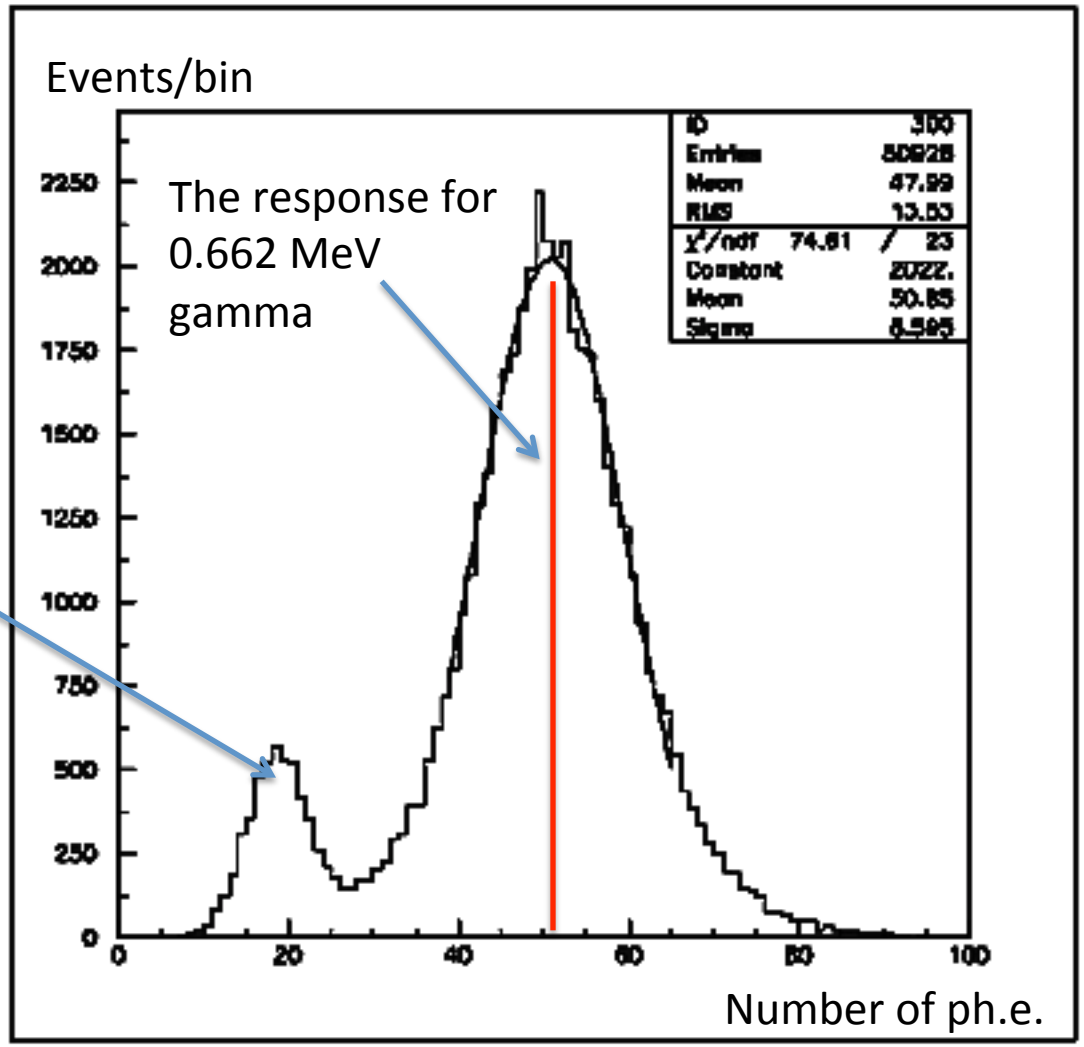

Experimental set up with tagging gamma source.

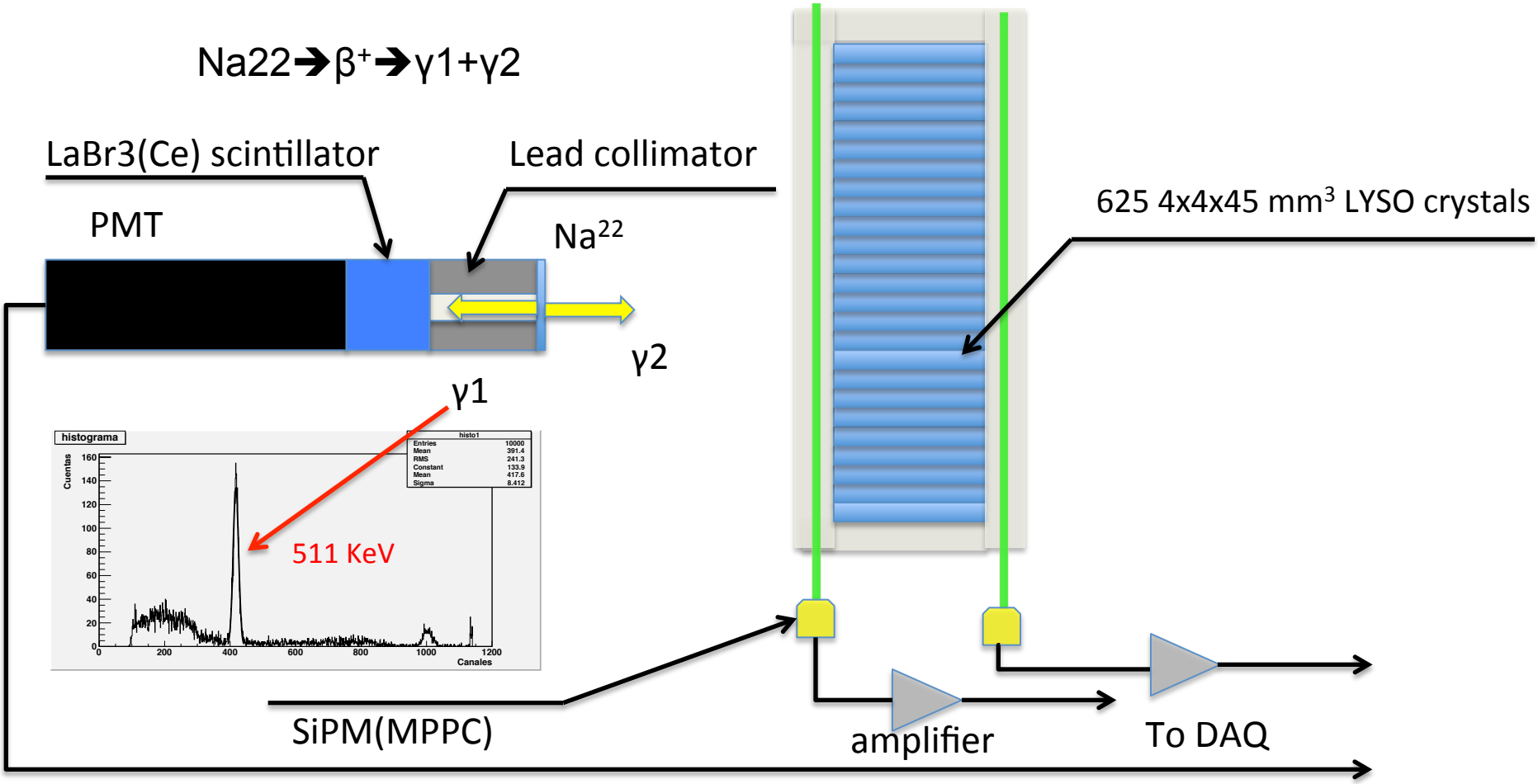

What we have….

- 650 4x4x45 mm^3 LYSO crystals (PreLude 420, St.Gobain) ($ 20K)
- LaBr3(Ce) scintillator for the gamma source (BriLanCe 380, St.Gobain) ($ 5K)
- HAMAMATSU PMT Module ($ 1K)
- DAQ (NIM crate, VME crate, VME USB controller, 4 modules V792AC QDC,PC)($ 35K)
- The test facility, the electronic facility, the mechanical facility with a 5-axis CHC milling machine.

What do we need…

UTFSM Budget Request

Item	Cost (k$USD)
110 HAMAMATSU Series S10931 MPPC	12
500 m KURARAY Y-11 WLS fiber	5
Electronics components	7
Read out boards	5
Plastics, wrapping, optical glues	2
Moving table, precise mechanics, supports	10
Undergraduate student	5
Total:	46

Plan of the R&D

- Make the tagging gamma source with Na22
- Measure the light attenuation length of the crystal for 511 KeV for different wrapping of the crystal
- Make Geant4 model for the pre-shower and select 2d or 3d option of the read out
- Produce pre-shower with read out
- Make accurate scan of the pre-shower with the tagging gamma source.