A Radiation Tolerant, Magnetic Immune Radiation Detector Readout Using Optical Phase-modulation-based Electro-optical Coupling

W. Xi, D. Weisenberger, C. Zorn
Jefferson Laboratory, Newport News, VA

Team

- Jefferson Lab Detector Group Members
  - Wenze Xi (Detector scientist) – PI
  - Carl Zorn, Ph.D. (Co-PI)
  - Drew Weisenberger, Ph.D. (Co-PI)
  - Jack McKisson, M.S. (Electrical engineer)
  - SeungJoon Lee, Ph.D. (Detector scientist)
  - John McKisson, (Software engineer)
  - Brian Kross (Mechanical engineer)

- University of Maryland Baltimore County (UMBC)
  - FowSen Choa (Professor)

Electro-optically Coupled Detector (EOCD)

Ultimate EOCD Characteristics:

- **High channel density:** ≈ 64 analog channels per single-mode optical fiber
- **Radiation tolerance**: neutron fluence ~$10^{10}/cm^2$
- **Magnetic field immunity:** ~ 3 Tesla
- **High channel SNR:** ≈ 20 dB
- **Timing resolution:** ~40 ps
- **Low Z:** compact detector design

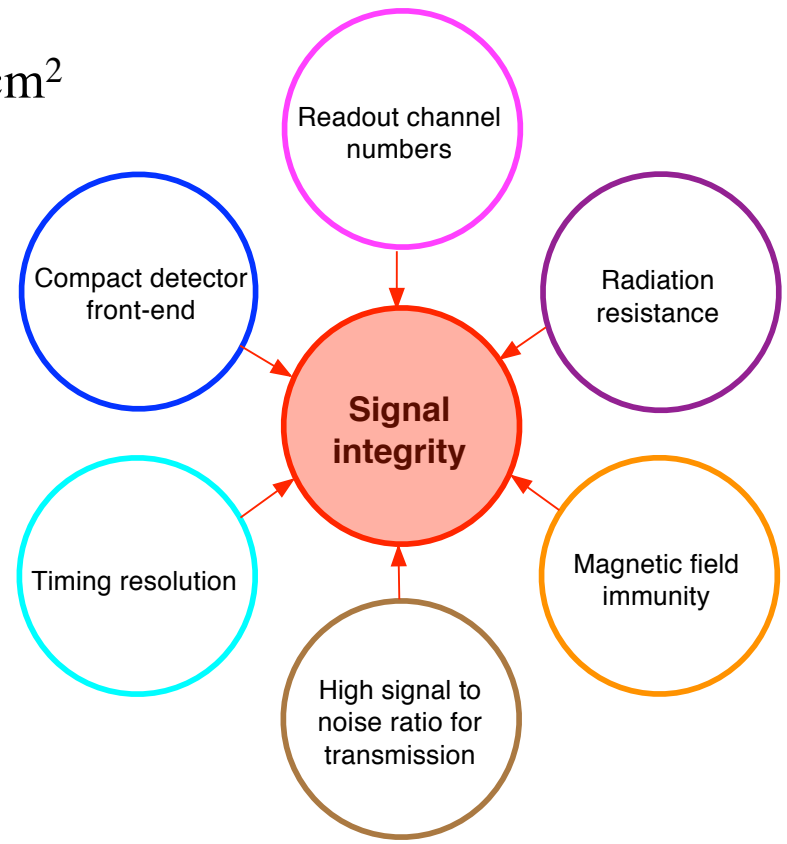

EOCD Simplified

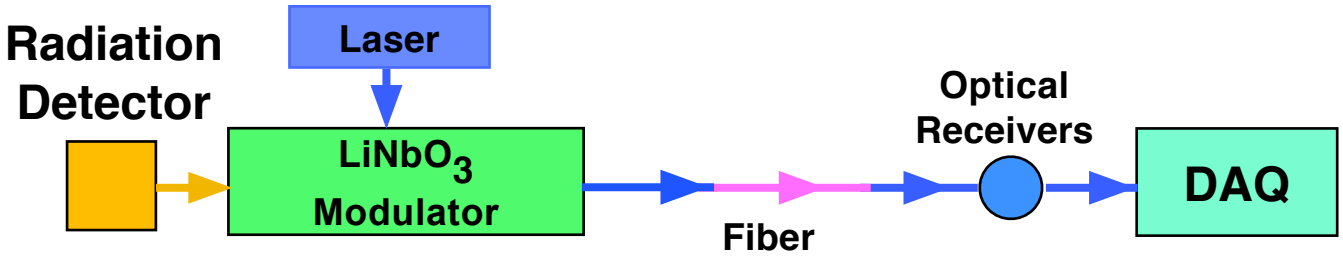

One-wavelength simplified EOCD system

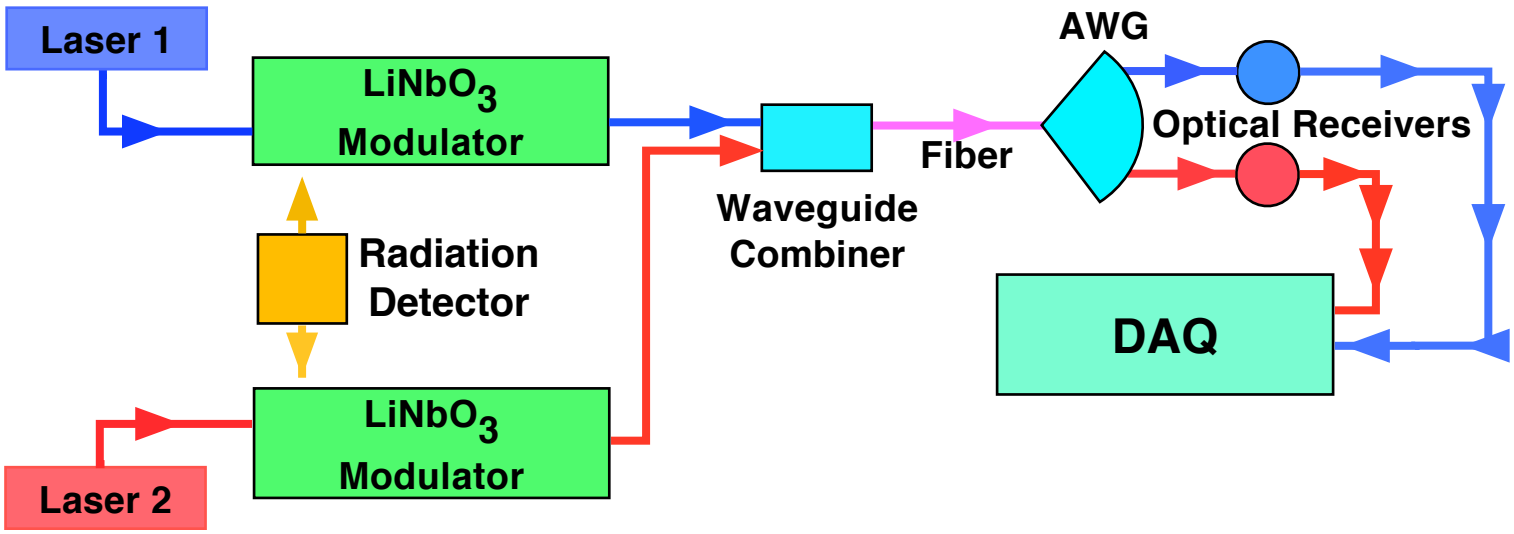

Two-wavelength EOCD system

EOCD for Nuclear Physics

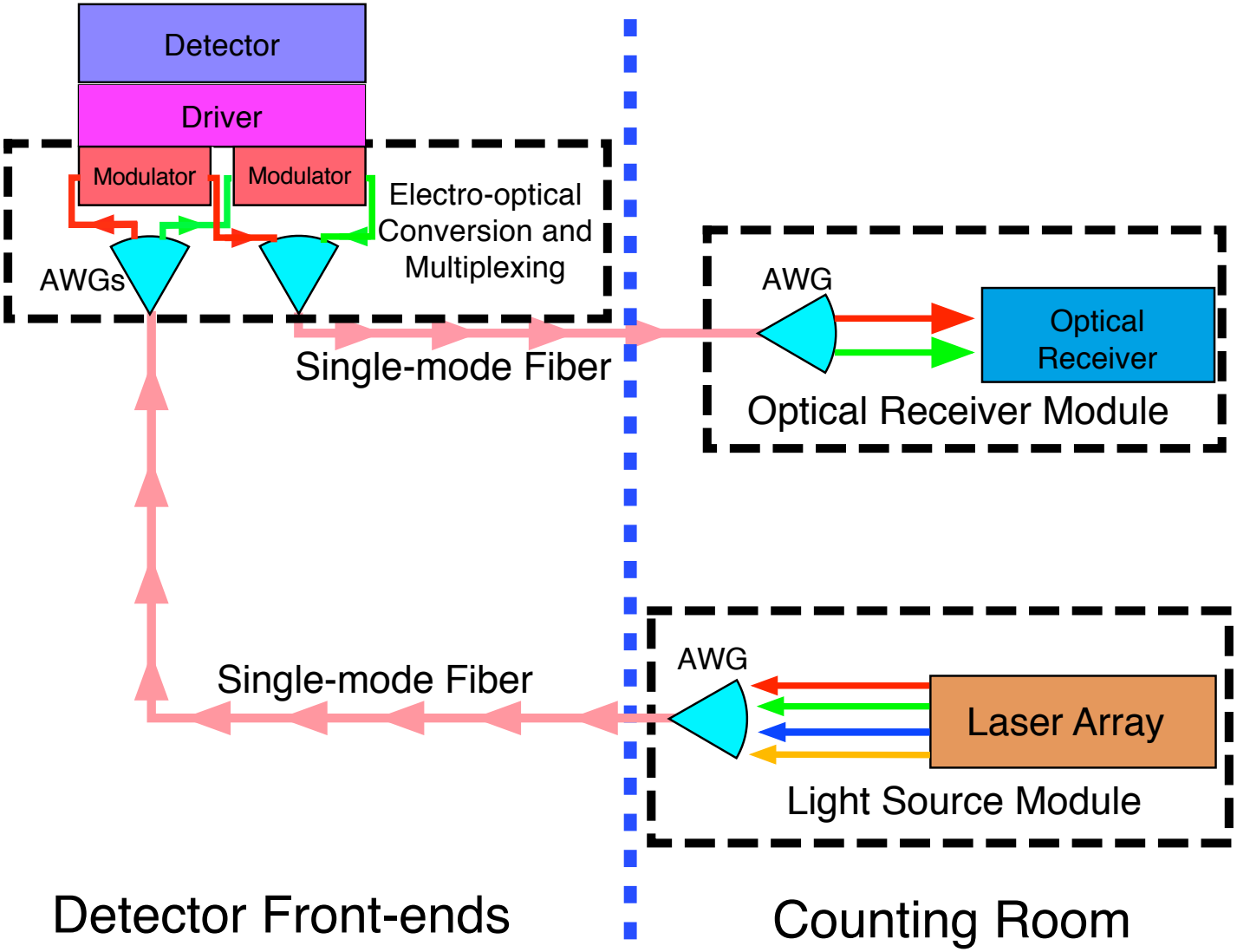

Published Results: Two-wavelength Analog Pulse Intensity Modulation

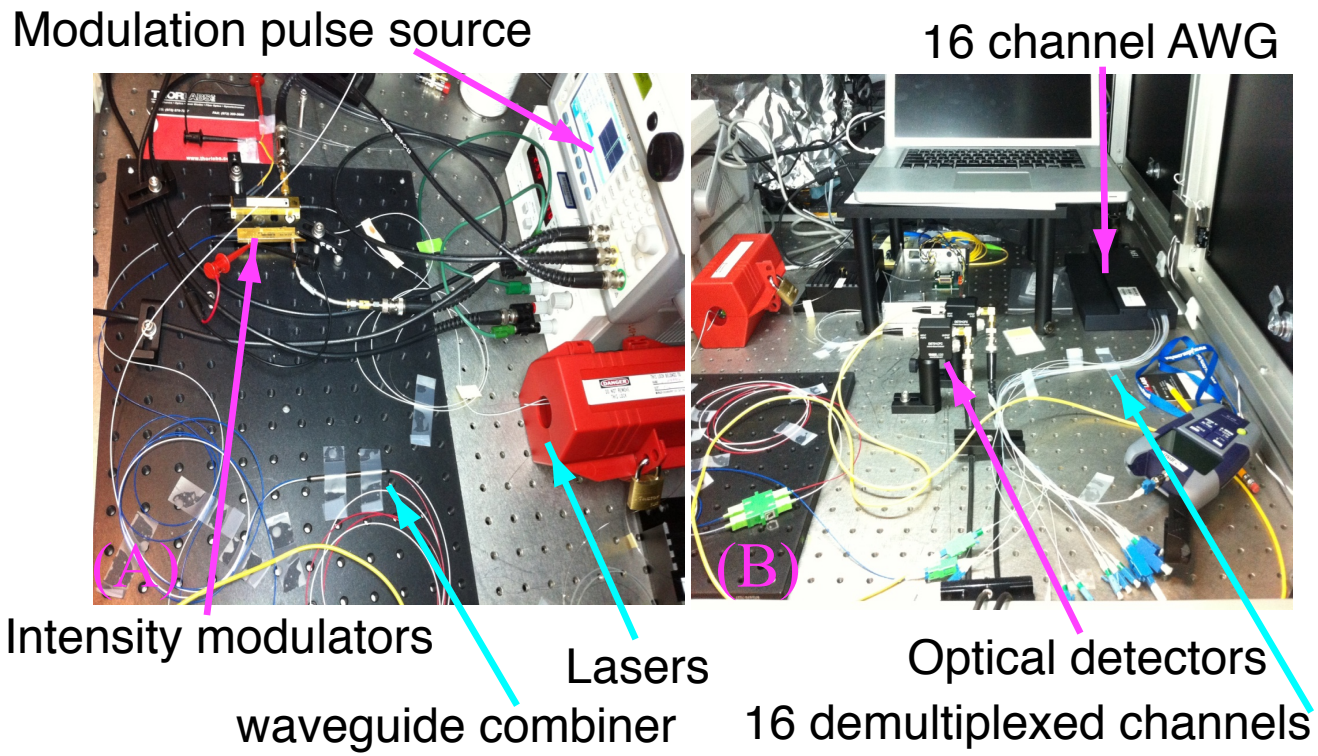

- Two-wavelength intensity-modulation-based analog EOCD system using commercial components

Wenze Xi, et. al, "Externally-modulated electro-optically coupled detector architecture for nuclear physics instrumentation," *IEEE Trans. On Nuc. Science*, Vol. 61, Issue 3, pp. 1333-1339, June 2014.

Published Results (1): High Fidelity Pulse Transmission

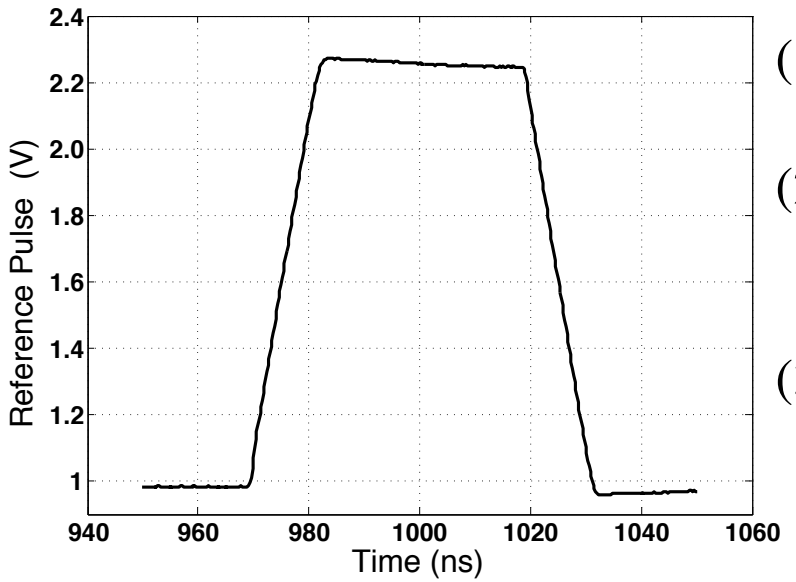

(1) Electrical reference analog pulses generated from arbitrary waveform generator

(2) Analog pulse FWHM 50 ns, rising edge 10 ns, falling edge 10 ns and pulse amplitude is ~1.28 V. Pulse repetition rate is 1 MHz.

(3) Comparisons between the reference pulse and received pulses after EOC show little difference

Experiment	FWHM (ns)	Rising Edge (ns)	Falling Edge (ns)	Amplitude (mV)
Reference	50.03 ± 0.01	9.99 ± 0.01	10.11 ± 0.01	1283.00 ± 0.30 *
1	50.08 ± 0.05	10.15 ± 0.06	10.21 ± 0.07	6.50 ± 0.01
2	49.93 ± 0.02	10.13 ± 0.06	10.22 ± 0.04	6.47 ± 0.01
3	50.09 ± 0.03	10.15 ± 0.04	10.21 ± 0.07	6.47 ± 0.03
4	49.93 ± 0.03	10.11 ± 0.03	10.24 ± 0.05	6.47 ± 0.02

Published Results (2): Trivial Inter-channel Interference

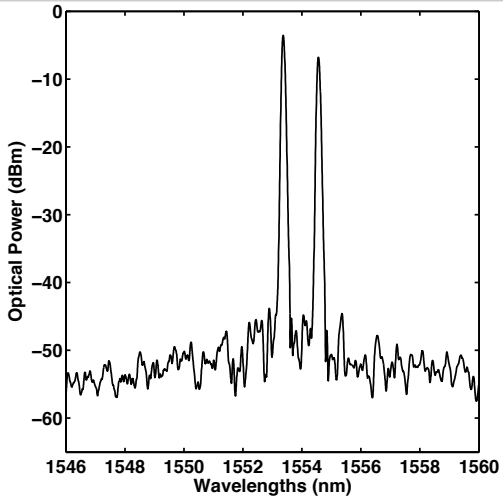

Simultaneous sending two pulse-modulated wavelengths (1553.365 nm and 1554.555 nm) through EOCD with optical peak power -3.57 dBm and -6.79 dBm, respectively. EOCD optical spectrum analysis shows:

Two peaks on channels 7 and 8

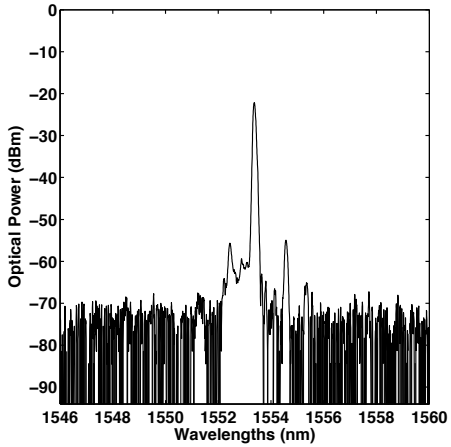

Channel 6

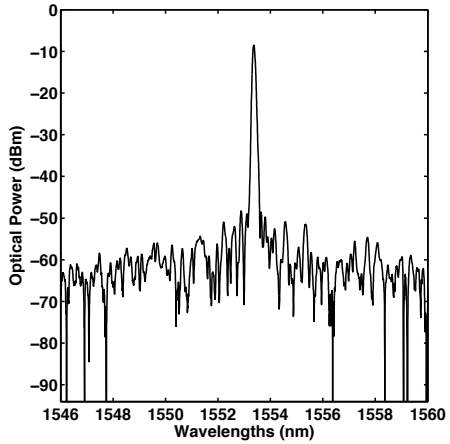

Channel 7

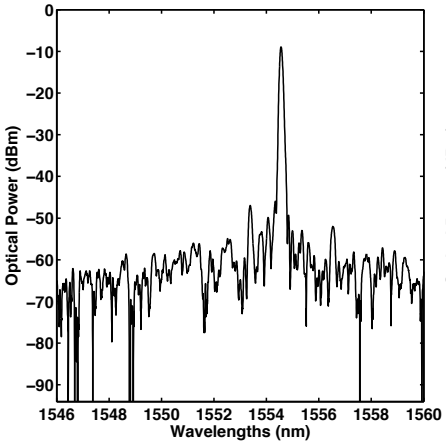

Channel 8

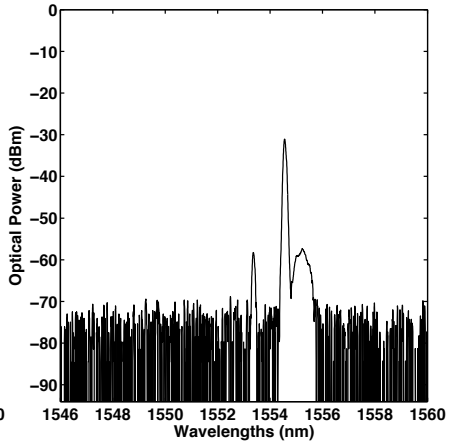

Channel 9

EOCD InP: Radiation Tolerance Testing

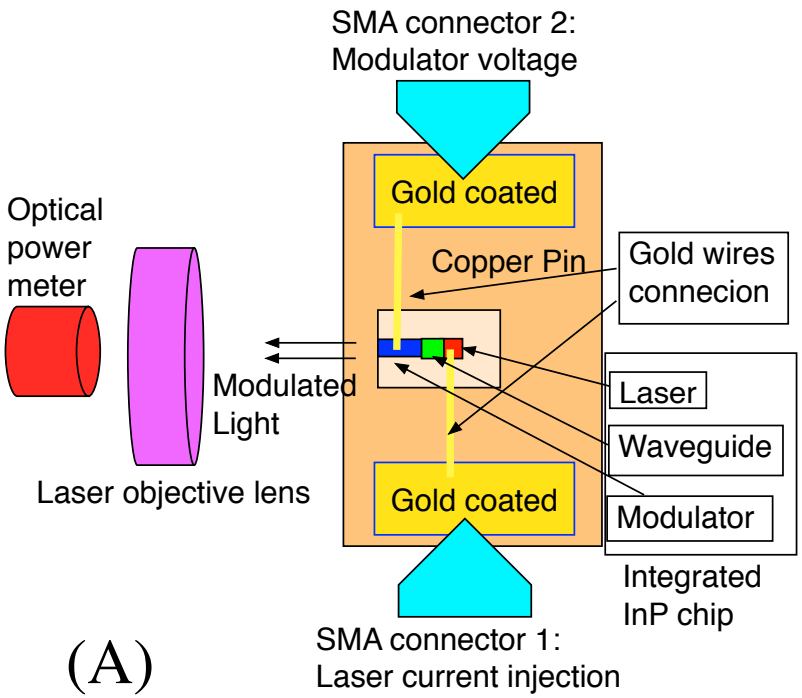

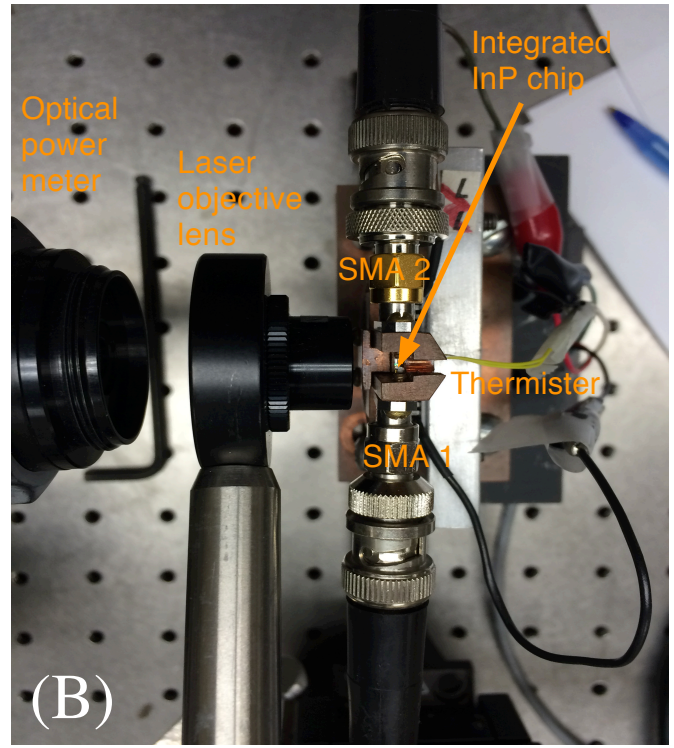

Figure (A) and (B): Post radiation tolerance testing diagram: InP-based integrated laser, waveguide, and modulator chip mounted on a copper pin. The left figure (A) is the system diagram of the radiation tolerance testing for the InP chip. The right figure (B) is the actual experiment setup.

EOCD InP: 10^{10} /cm^2 Neutron Fluence

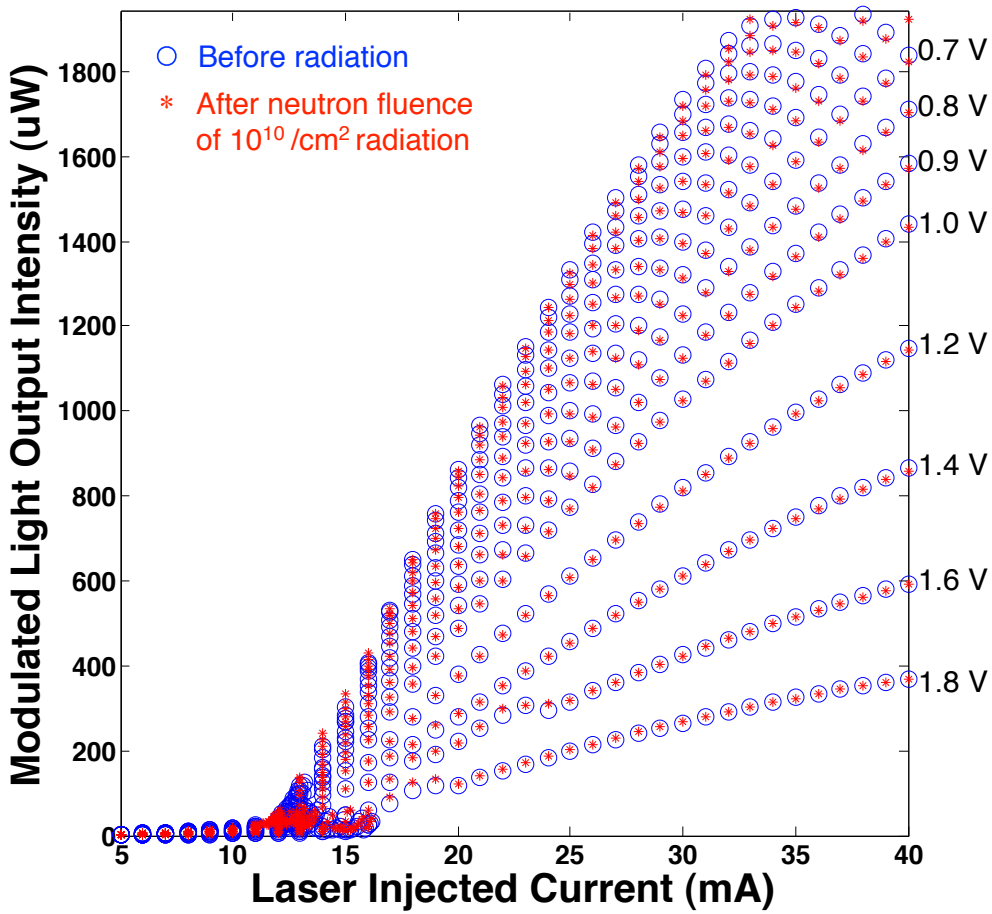

Radiation tolerance testing before and after radiation (with post-irradiation annealing). Left vertical axis indicates modulation voltages.

EOCD InP: 3 Tesla Magnetic Field Testing

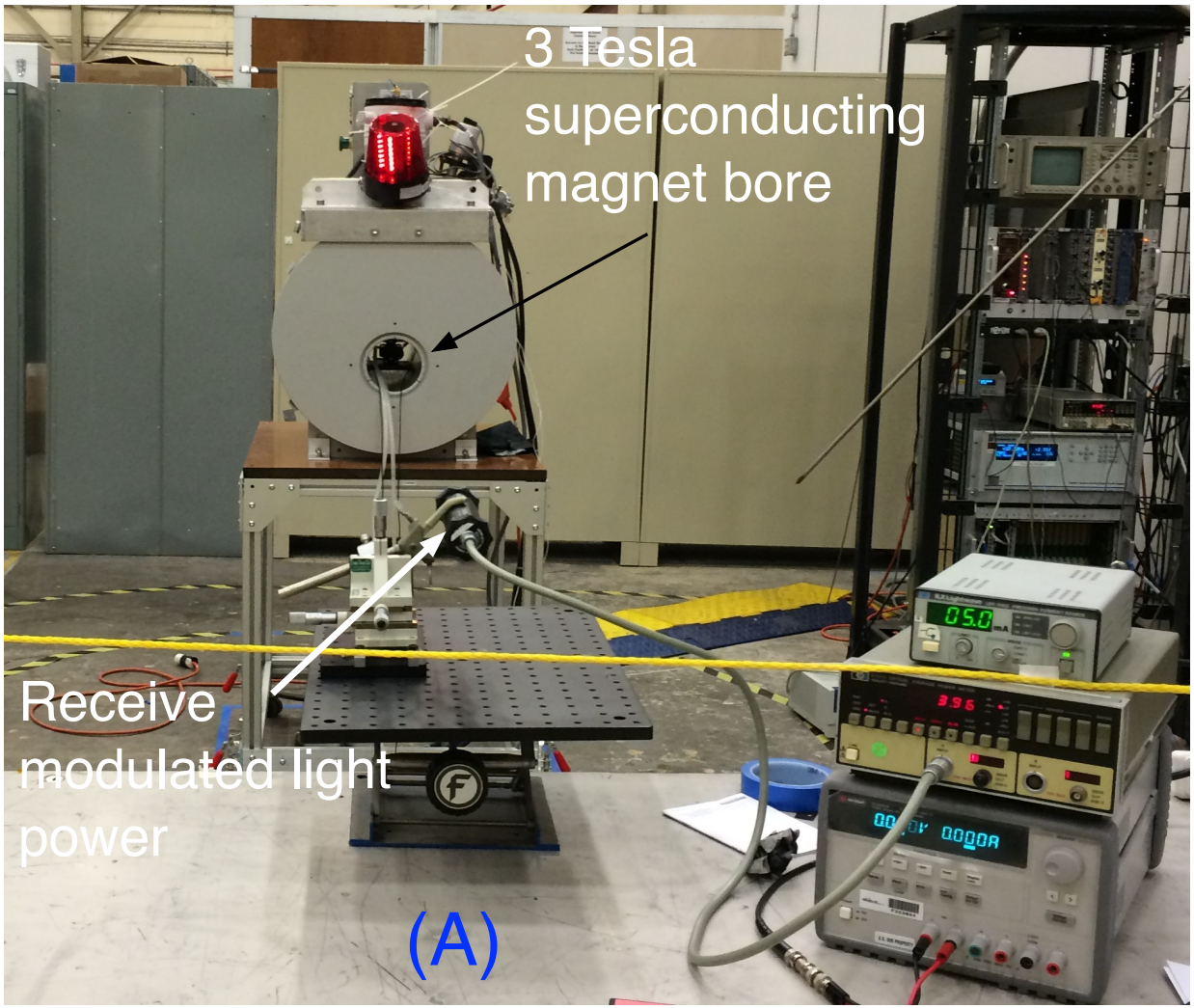

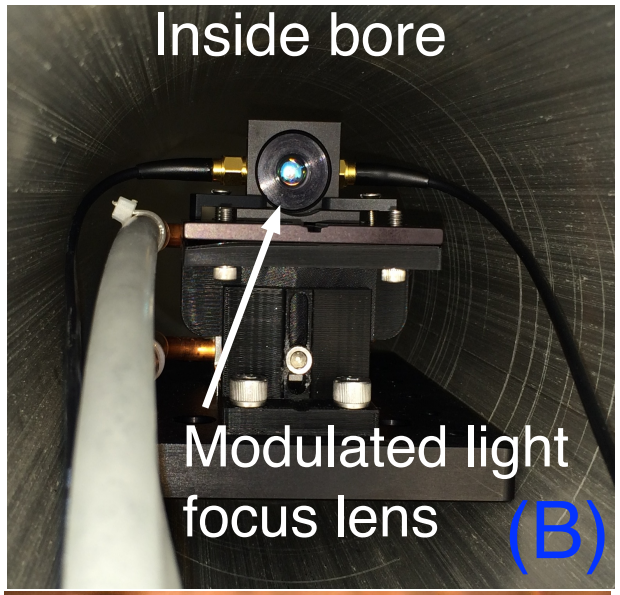

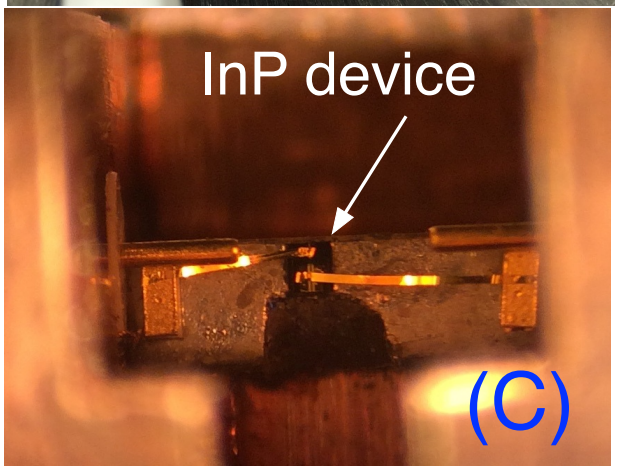

Strong magnetic field 3 Tesla InP device testing: (A) Setup, (B) device mount inside superconducting bore, and (C) InP device installed on the top of a copper pin.

EOCD InP: 3 Tesla Testing (Cont.)

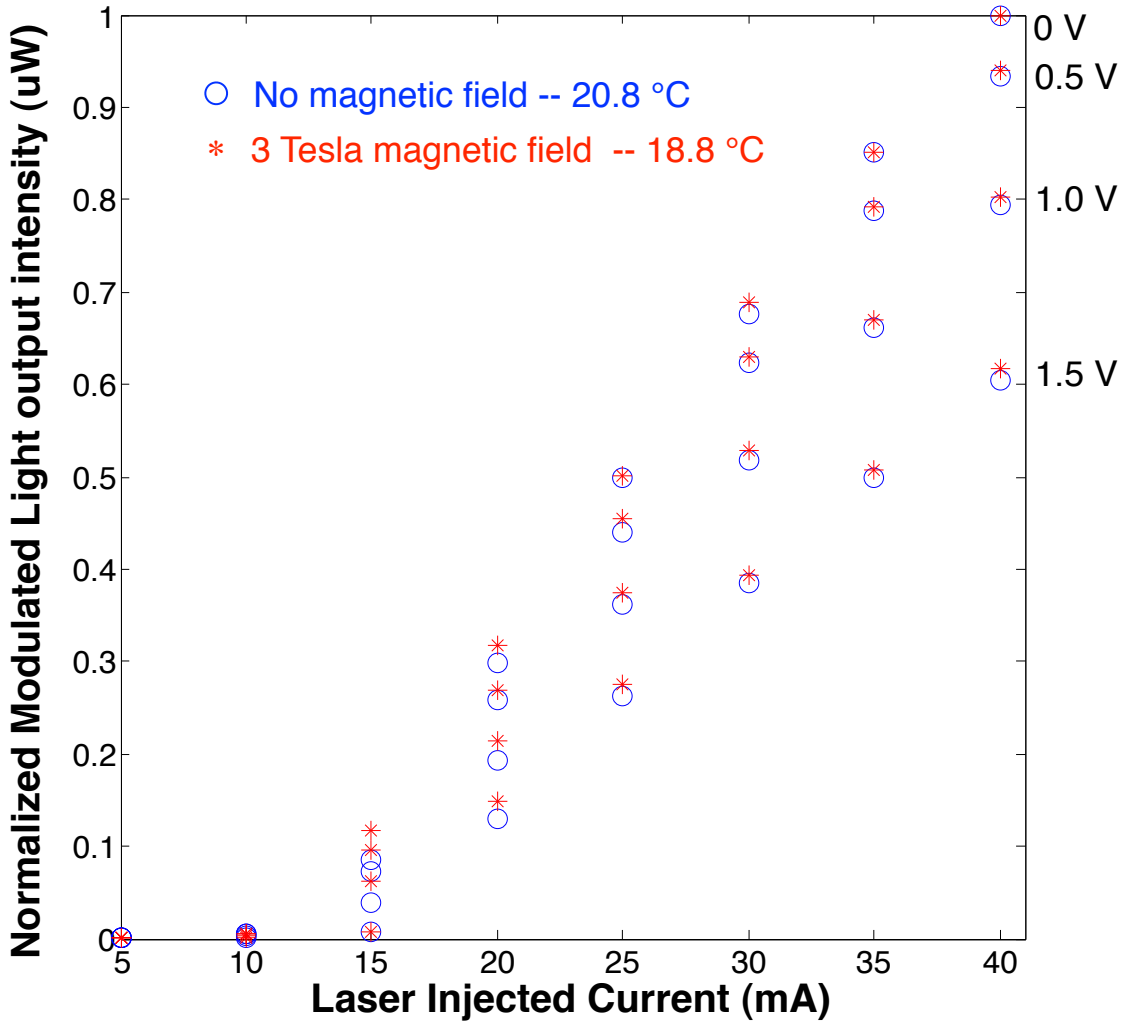

Normalized modulated light intensity comparison: no magnetic field and 3 Tesla magnetic field.

EOCD $LiNbO_3$: Optical Intensity Loss

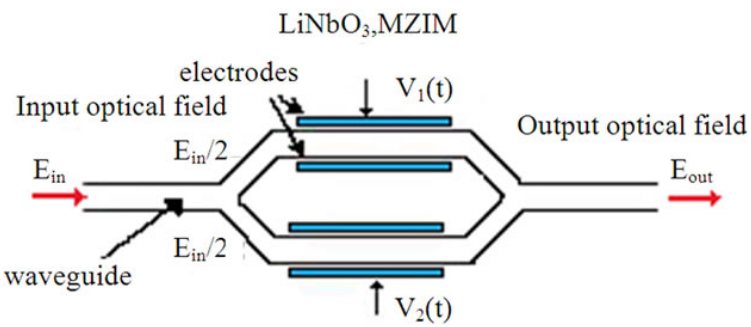

Example: Mach-zehnder optical intensity modulator

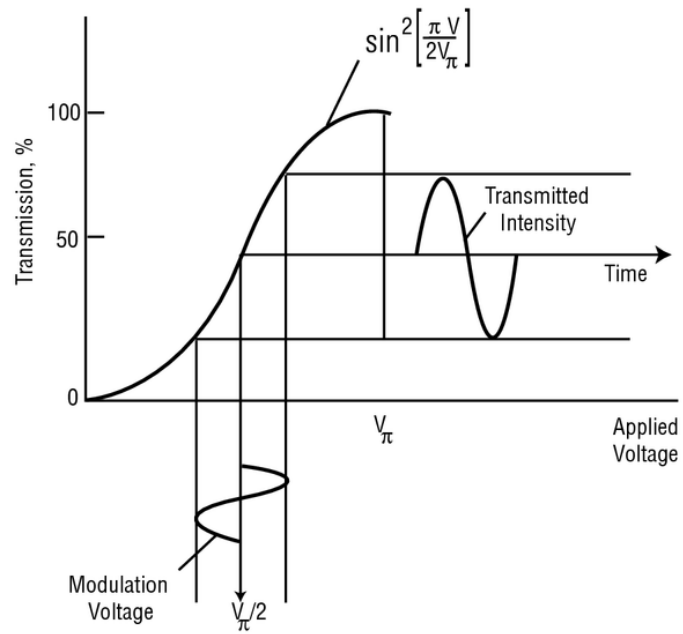

(1) Optical intensity modulation can only provide linear modulation in a center area of V_π curve.

(2) Most of CW optical power is cut and wasted

Proposed EOCD: Optical Phase-modulation has Gain Advantage

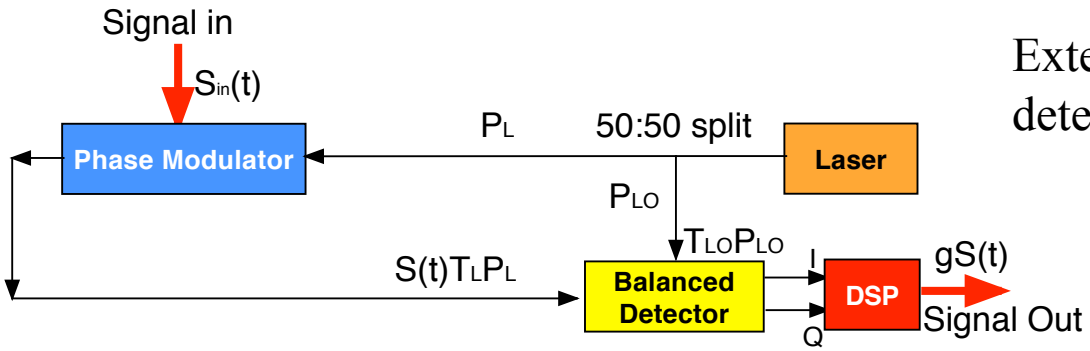

External phase modulation with balanced detector. Optical gain can be achieved by:

$$G = \frac{\pi^2 P_L P_{LO} T_L T_{LO} R_s^2 r_d^2}{V_\pi^2}$$

A 100 mW laser will results in detector signal gain of 9.58 dB

Calculation details: let assume 100 mW laser, $P_L = P_{LO} = 40\ mW$ are the input powers in the signal and local oscillator channels, $T_L = 0.2$ is the transmission of the link, $T_{LO} = 0.2$ is the transmission of LO channel, $R_s = 50$ ohms is the impedance of the source, and $V_\pi = 1V$ s a half-voltage, and $r_d = 1.2\ A/W$ is the detector responsivity. These numbers render a realistic optical link gain $G = 9.09$ (9.58 dB).

Proposed Testing

Previous:

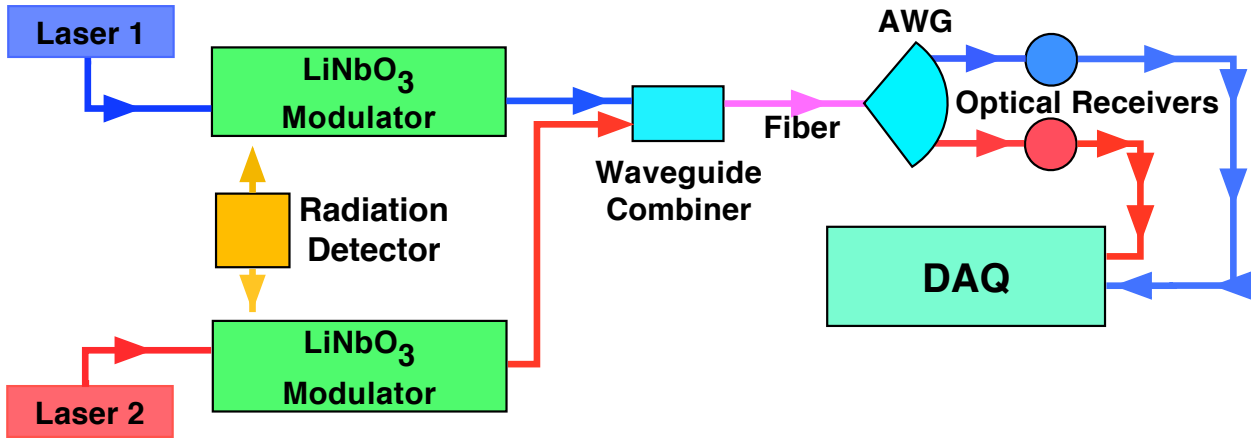

Proposed:

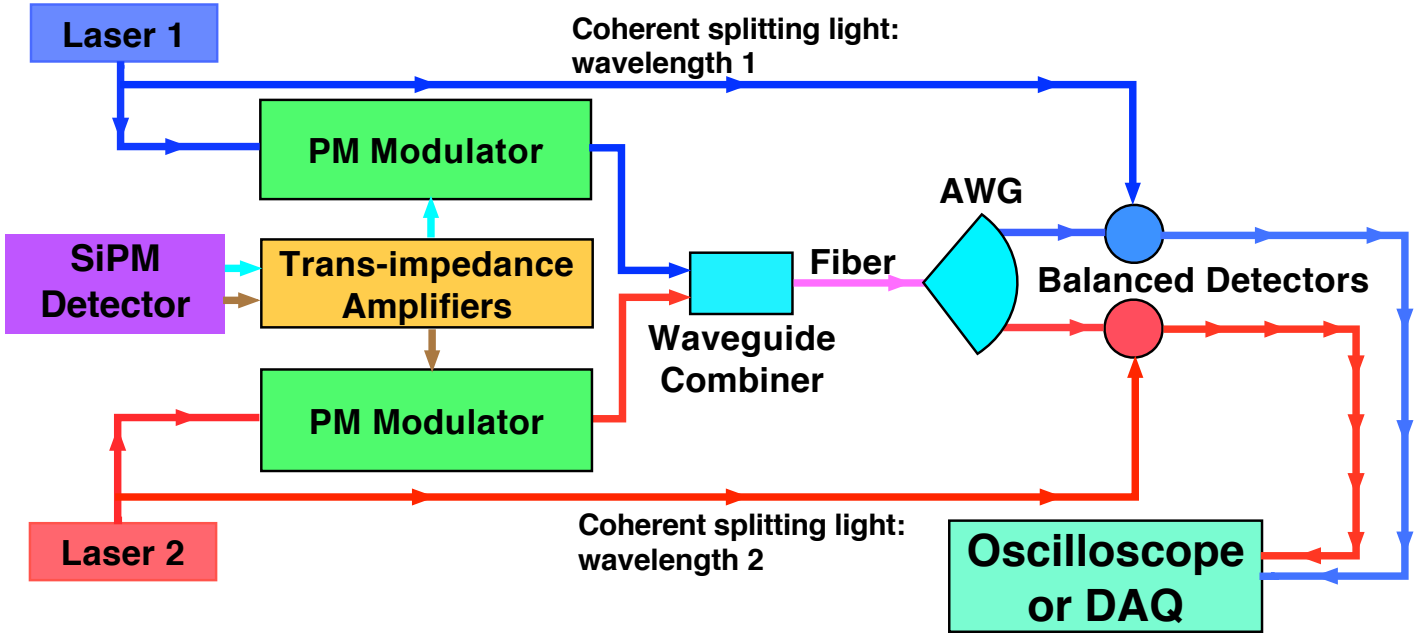

Experiments and Prototyping

- Conduct the similar EOCD experiments but with phase-modulation and balanced detection
  - Pulse high-fidelity transmission
  - Inter-channel interference
  - Optical power gain

- Prototype and test InP phase-modulator-based EOCD
  - Previous testing for pulse fidelity, inter-channel interference, and optical gain
  - Radiation tolerance
  - Magnetic field immunity

Seed Funding Request

- Phase modulator cost (Thorlab)….$3,000
- Balanced detector cost (Newport) …. $2,400
- Setup improvements……..$ 2,400
- *JLab overhead……..$4,800 (48%)*

- **JLab TOTAL……..$15,000**

- **Subcontracted Cost ……$5,000**

- **TOTAL ……$20,000**

Thank you!