I404

Four Channel Digital Electrometer

User Manual

Pyramid Technical Consultants, Inc.
1050 Waltham Street Suite 200, Lexington MA 02421 USA
US: TEL: (781) 402 1700 ♦ FAX: (781) 402-1750 ♦ EMAIL: SUPPORT@PTCUSA.COM
Europe: TEL: +44 1273 493590

1 Contents

1 Contents **2**

2 Safety Information **9**

3 Models **11**

4 Scope of Supply **12**

5 Optional Items **13**

5.1 Power supplies *13*

5.2 Signal cables and cable accessories *13*

5.3 Data cables *13*

5.4 Fiber-optic loop *13*

6 Intended Use and Key Features **14**

6.1 Intended Use *14*

6.2 Key Features *14*

7 Specification **15**

8 How the I404 Works - an Overview **19**

8.1 Current measurement process *19*

8.2 Current ranges *23*

8.3 Resolution and averaging *23*

8.4 Triggering *23*

8.5 Self-testing and calibration *24*

8.6 Monitor outputs *24*

9 Installation **25**

9.1 Mounting *25*

9.2 Grounding and power supply *25*

9.3 Connection to signal source *25*

9.3.1 Typical setup 25

9.3.2 Signal cables 27

9.3.3 Signal current path 27

10 Getting Started Using ASCII Communication 29

11 Getting Started using the PSI Diagnostic Host Program 32

11.1 Installing the PSI Diagnostic Program *32*

11.2 Connecting to the I404 ..... *32*

11.3 Data screen *34*

11.4 Setup screen *38*

11.5 Device screen *42*

12 Principle of Operation 45

12.1 Gated Integrators *45*

12.2 I404 Circuit Overview *46*

13 Making Current Measurements 48

13.1 Current Ranges *48*

13.2 Averaging *49*

13.3 Triggering *49*

13.4 Calibration *50*

13.5 Monitor outputs *50*

13.5.1 Current monitoring 50

13.5.2 Position monitoring 52

14 Beam position readout 53

14.1 How compensation factors are used *53*

14.2 Position algorithms *55*

14.3 Considerations when using split or quadrant sensors *56*

14.4 Position readout screens in the PSI Diagnostic 57
14.4.1 Position sub-tab 57
14.4.2 XY sub-tab 58
14.4.3 X & Y sub-tab 60

15 High Voltage Option 61

15.1 High voltage filter 61

15.2 High voltage readback 61

15.3 High voltage protection features 62

16 Connectors 64

16.1 Front panel connectors 64
16.1.1 Signal inputs 64
16.1.2 Analog monitor outputs 64
16.1.3 Frequency monitor outputs 64
16.1.4 Gate input 64
16.1.5 Auxiliary HV out 65
16.1.6 Ground lug 65

16.2 Rear panel connectors 65
16.2.1 Power input 65
16.2.2 RS-232 and RS-485 communications 65
16.2.3 Fiber-optic communications 66

17 Controls and Indicators 67

17.1 Front panel controls 67

17.2 Rear panel controls 67
17.2.1 Mode switch 67
17.2.2 Address switch 68

17.3 Front panel indicators 68
17.3.1 HV active 68

17.4 Rear panel indicators 68
17.4.1 Power 68
17.4.2 Serial 68
17.4.3 Optical 68

17.4.4 Rcv 68
17.4.5 Xmit 68
17.4.6 Status 68
17.4.7 Link 69

18 Internal Jumpers 70

18.1 High voltage options 70

19 Communications Interfaces 72

19.1 I404 Interfaces 72

19.2 RS-485 connection example 72

20 Communications protocols 74

20.1 Overview 74

20.2 ASCII Protocol - SCPI 75

20.2.1 Messages 75
20.2.2 Status registers 75
20.2.3 Host Commands 76

20.3 Terminal Mode 83

21 Software updates 84

22 Techniques for Making Low Current Measurements 87

22.1 Guarding and screening 87

22.2 Temperature 88

22.3 Triboelectric effects 88

22.4 Battery Effects 89

22.5 Piezoelectric Effects 89

22.6 Integration Period and Synchronization 89

22.7 Summary 91

23 Fault-finding 93

24 Maintenance 97

25 Returns procedure 98

26 Support 99

27 Disposal 100

28 Declaration of Conformity 101

29 Hardware Versions 102

30 Firmware compatibility 103

31 User Manual Revision History 104

Table of Figures

Figure 1. I404 chassis end panels. 17
Figure 2. I404 case side and plan views. Dimensions mm. 18
Figure 3. I404 block diagram. 19
Figure 4. A current to be measured 20
Figure 5. Voltage on a capacitor that is connected at time zero 20
Figure 6. Capturing the voltage at two times 21
Figure 7. Discharging the integration capacitor and starting a new cycle. 21
Figure 8 Repeated integrations to sample a continuous current signal. 22
Figure 9. .Multiple ADC readings on each integration. 23
Figure 10. Schematic I404 installation for PIN diode readout 26
Figure 11. Schematic I404 installation for ionization chamber readout 26
Figure 12. Path of measured current (photodiodes). 28
Figure 13. Path of measured current (ion chamber). 28
Figure 14. RS232 connection cable from the I404 to a PC serial port (DB9). Pins are shown looking at the face of the connectors. 29
Figure 15. Hyperterminal COM port setup. 30
Figure 16. Hyperterminal terminal settings 30
Figure 17. Example Hyperterminal session 31
Figure 18. Direct RS-232 connection to the I404. 33
Figure 19. Connection through an A300. 33
Figure 20. PSI Diagnostic Search Utility 34
Figure 21. Data/current tab: I404 connected via COM1 and running with default settings, showing background noise. 35
Figure 22. Setup tab: I404 connected via an A500 controller and running in Basic Mode. 38
Figure 23. Setup tab: I404 running in Expert Mode. 39
Figure 24. Internal calibration current routed to channel 1, histogram display format. 42
Figure 25. Device tab, showing firmware update utility controls. 43
Figure 26. The basic gated integrator circuit. 45
Figure 27. Example gated integrator timing diagram. T1 integration period, T2 setup, T3 reset, T4 settle, T5 Sw1 width. The Sw1 opening transition is displaced from the Sw2 closing transition by the Sw1 offset 46
Figure 28. I404 block schematic. 47
Figure 29. Monitor output mapping - current signals. Analog voltage on the left, Normal and Absolute frequency mappings on the right. 51
Figure 30. Example of the effect of sensor compensation factors. Analog voltage on the left, Normal and Absolute frequency mappings on the right. 52
Figure 31. Monitor output mapping - position functions. 52
Figure 32. Sensor compensation value fields as shown in the PSI Diagnostic. 53
Figure 33. Dataflow in the I404 54
Figure 34. Single axis readout from a pair of split sensors 55
Figure 35. Two axis readout from a quadrant sensor 55
Figure 36. Position response from a split sensor. 57
Figure 37. Position data sub-tab 58
Figure 38. XY data sub-tab for quadrant calculation mode 59
Figure 39. XY position data sub-tab for split calculation mode 59
Figure 40. X & Y position data sub-tab 60
Figure 41 Rear panel showing controls and indicators 67
Figure 42. Using RS-485 as an RS-232 extender 72
Figure 43. RS-485 cable I404 to TC100. 73
Figure 44. Selecting the hex file to load. 85
Figure 45. Upload in progress. 86
Figure 46. Offset current entering an unguarded input 87
Figure 47. Guarded input 88

Figure 48. Guarded and screened input _____ *88*
Figure 49. Triboelectric noise from flexing conventional RG-58 cable (left) compared to low-noise RG-58 (right) *89*
Figure 50. Separation of a 5 pA signal from background _____ *90*

2 Safety Information

This unit is designed for compliance with harmonized electrical safety standard EN61010-1:2000. It must be used in accordance with its specifications and operating instructions. Operators of the unit are expected to be qualified personnel who are aware of electrical safety issues. The customer's Responsible Body, as defined in the standard, must ensure that operators are provided with the appropriate equipment and training.

The unit is designed to make measurements in **Measurement Category I** as defined in the standard.

CAUTION. The I404 can generate high voltages as follows, according to the selected high voltage option:

+ or - 3000 VDC at 330 uA maximum.
+ or - 2000 VDC at 500 uA maximum
+ or - 1000 VDC at 1 mA maximum
+ or - 500 VDC at 2 mA maximum
+ or - 200 VDC at 5 mA maximum
Present on the central conductor of the SHV connector.

The user must therefore exercise appropriate caution when using the device and when connecting cables. Power should be turned off before making any connections.

In applications where high energy charged particle beams can strike electrodes which are normally connected to the I404, voltages limited only by electrical breakdown can build up if the I404 is not connected to provide the earth return path. The user must ensure that a suitable earth return path is always present when the particle beam may be present.

The unit must not be operated unless correctly assembled in its case. Protection from high voltages generated by the device will be impaired if the unit is operated without its case. Only Service Personnel, as defined in EN61010-1, should attempt to work on the disassembled unit, and then only under specific instruction from Pyramid Technical Consultants.

The unit is designed to operate from +24VDC power, with a maximum current requirement of 500mA. A suitably rated power supply module is available as an option. Users who make their own power provision should ensure that the supply cannot source more than 2000mA.

A safety ground must be securely connected to the ground lug on the case.

Some of the following symbols may be displayed on the unit, and have the indicated meanings.

Direct current

Earth (ground) terminal

Protective conductor terminal

Frame or chassis terminal

Equipotentiality

Supply ON

Supply OFF

CAUTION – RISK OF ELECTRIC SHOCK

CAUTION – RISK OF DANGER – REFER TO MANUAL

3 Models

I404	Four channel gated integrator electrometer with 100pF and 3300pF feedback capacitors.
-XP30/20/10/5/2	Add positive 0 to 3000 V /2000 V / 1000 V / 500 V / 200 V auxiliary bias output
-XN30/20/10/5/2	Add negative 0 to 3000 V /2000 V / 1000V /500 V / 200 V auxiliary bias output
-Cx/y	Change feedback capacitors to x pF and y pF (default is -C100/3300)

Example:

I404-XP10-C100/1000	I404 with 1000V positive auxiliary bias output, 100 pF and 1000 pF feedback capacitors.

4 Scope of Supply

I404 model as specified in your order.

PSU24-40-1 Plug pack 24 VDC power supply

ADAP-D9F-MINIDIN: Adaptor cable, DSub 9 pin female to mini-DIN six pin male.

ADAP-LEMO-BNC: Adaptor, Lemo 00 coax male to BNC jack.

USB memory stick containing:
- User manual
- PSI diagnostic software files

Optional items as specified in your order.

OEM customers may not receive all items.

5 Optional Items

All cable lengths can be customized upon request.

5.1 Power supplies

PSU24-40-1: +24 VDC 45W PSU (universal voltage input, plug receptacle for standard IEC C14 three-pin socket) with output lead terminated in 2.1mm threaded jack.

5.2 Signal cables and cable accessories

CAB-BNC-COLN-25-BNC: Cable,RG-58 coaxial low noise BNC plug to BNC plug, 3-lug, 25'.

CAB-SHV-25-SHV: Cable, coaxial, SHV to SHV, 25'.

CAB-LEMO-CO-25-LEMO: Cable, coaxial 50ohm, Lemo 00 coax plug to Lemo 00 coax plug, 25'.

ADAP-LEMO-BNC: Adaptor, Lemo 00 coax male to BNC jack.

5.3 Data cables

ADAP-D9F-MINIDIN: Adaptor cable, DSub 9 pin female to mini-DIN six pin male.

CAB-ST-P-10-ST: Cable fiber-optic 1mm plastic, ST terminated, 10m.

CAB-ST-HCS-10-ST: Cable fiber-optic 1mm glass, ST terminated, 10m.

5.4 Fiber-optic loop

A360: fiber-optic loop controller / Ethernet adaptor.

A500: intelligent cell controller with Ethernet interface.

A560: intelligent cell controller with Ethernet interface.

6 Intended Use and Key Features

6.1 Intended Use

The I404 is intended for the measurement of small charges or corresponding currents (from pA to µA) generated by devices such as ionization chambers, in-vacuum beam position monitors, proportional chambers and photodiodes. Four input channels make the I404 particularly well-suited to four-quadrant electrode systems used for beam centering. The I404 has design features which make it tolerant of electrically noisy environments, but the place of use is otherwise assumed to be clean and sheltered, for example a laboratory or light industrial environment. The unit may be used stand-alone, or networked with other devices and integrated into a larger system. Users are assumed to be experienced in the general use of precision electronic circuits for sensitive measurements, and to be aware of the dangers that can arise in high-voltage circuits.

6.2 Key Features

Highly sensitive charge and current measuring system.

Four gated integrator signal input channels.

External gate input.

Analog and frequency monitor outputs with configurable mapping.

Dynamic range 1 pA to 100 µA with standard capacitors.

Built-in calibration check current source.

RS-232, RS-485 and fast fiber-optic serial interfaces built-in. Selectable baud rates.

Can be operated in a fiber-optic serial communication loop with up to thirteen other devices.

100BaseT Ethernet available through the A300 and A500 interfaces.

ASCII and binary serial data formats.

Auxiliary HV output option up to + or – 3000 VDC.

7 Specification

Inputs	Four
Integration time	Adjustable, 100 µs minimum, 10 s maximum.
Input noise current	< 100 fA rms + 1 fA rms per pF input load up to 100 pF (1 second integration, 100 pF capacitor)
Input offset current	< 10 pA, 15 to 25 C Offset can be removed by zero subtraction) (excluding external background current sources)
Stability	Output drift < 200 fA / C / hour (100 pF feedback)
Digitization	16 bit ADC multiplexing four integrator signals over +/- 10 V integrator output range, 200 kHz (50 kHz effective per channel). Built-in averaging gives up to 20 bit effective resolution.
Linearity	Deviation from best fit line of individual readings < 0.1% of maximum current or charge reading for given feedback capacitor and integration time setting.
Drift	< 0.5% over 12 hours.
External accuracy	Better than 0.5% of full scale in use, integration time 500 µs to 1 sec, after calibration with built-in source, with cable capacitance not exceeding 750 pF.
Integration time	User selectable, 100 µsec to 65 sec.
Averaging modes	Multiple integrations. Multiple conversions per integration.
Trigger modes	Internal (autorun), external start (triggered).
Position calculation	Difference over sum algorithm, with compensation factors for non-uniform sensor response. Quadrant or split sensor. Position values can be read by host computer, and sent to monitor output connectors.
Auxiliary HV PSU (option)	0 to 3000 V programmable 14 bit resolution, 1 watt max. Noise and ripple < 0.001% of full scale at full load (options up to 2 kV) < 0.1% of full scale at full load (3 kV option) Output filter R kohm / 3.3 nF, where R =33.2k for 3 kV, 2 kV; 10k for 1 kV, 4k7 for 500V, 0k for 200V..

External gate	0 / +5 V (TTL level), 10 kohm input impedance.
Power input	+24 VDC (+/-2 V), 350 mA typical, 500 mA max.

Controls	Two rotary controls for loop address and communications mode.
Displays	Status LEDs for power, device status, communications mode, data traffic). HV on indicator LED with auxiliary HV PSU option

Case	Stainless steel sheet.
Case protection rating	The case is designed to rating IP43 (protected against solid objects greater than 1mm in size, protected against spraying water).
Weight	1.64 kg (3.6 lb).
Operating environment	0 to 35 C (15 to 25 C recommended to reduce drift and offset) < 70% humidity, non-condensing vibration < 0.1g all axes (1 to 1000Hz)
Shipping and storage environment	-10 to 50C < 80% humidity, non-condensing vibration < 2 g all axes, 1 to 1000 Hz
Dimensions	(see figures 1 and 2).

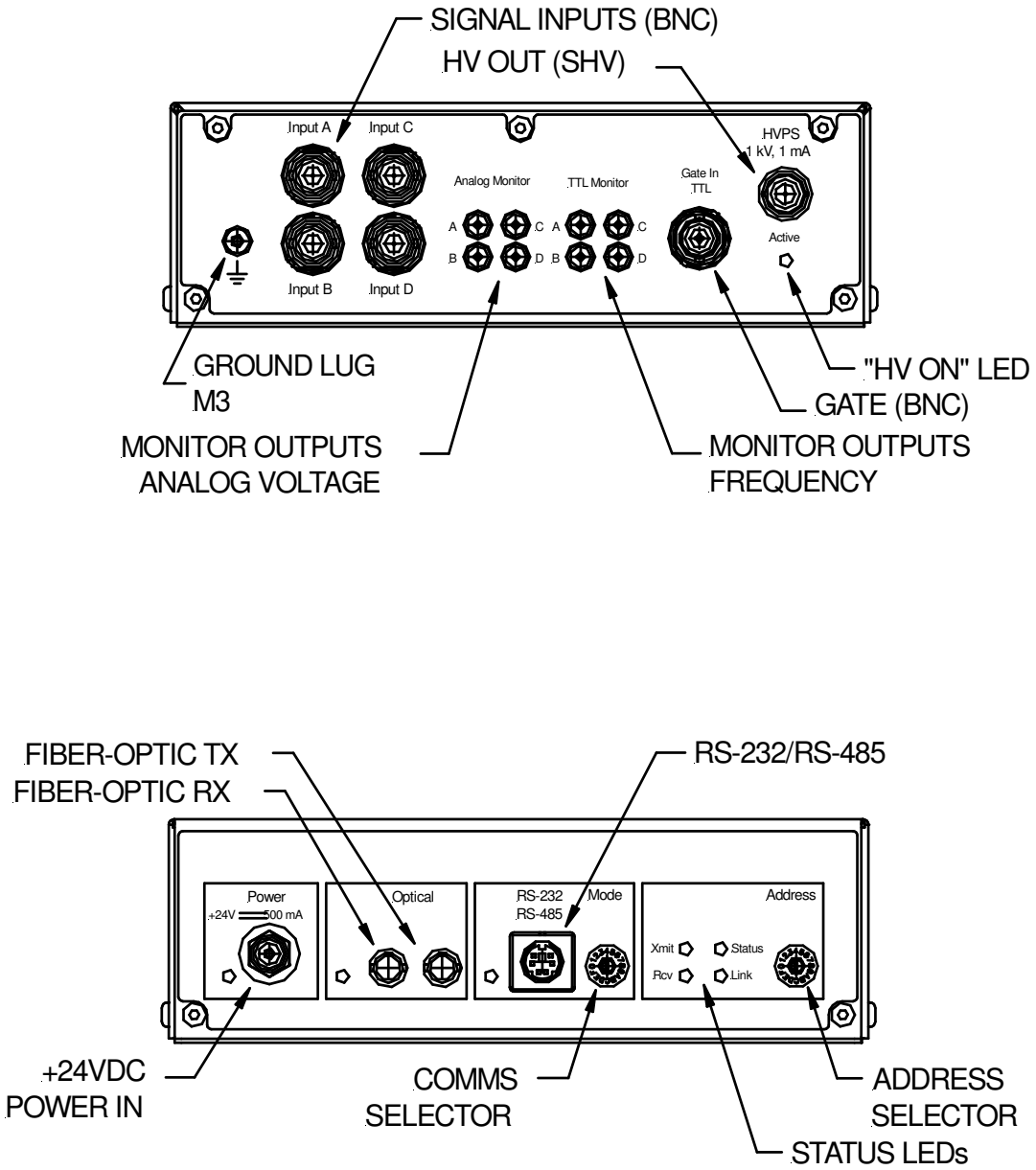

Figure 1. I404 chassis end panels.

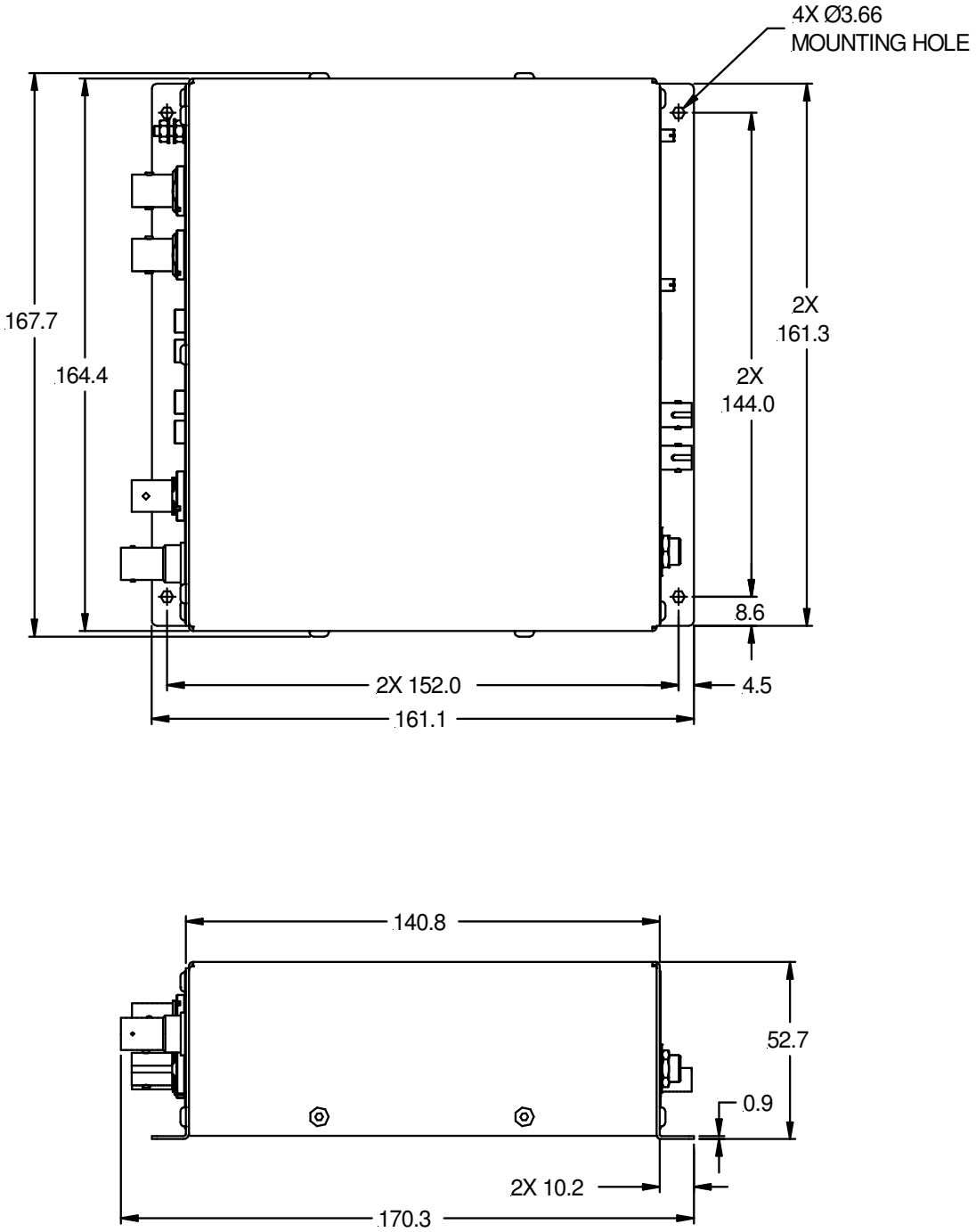

Figure 2. I404 case side and plan views. Dimensions mm.

8 How the I404 Works - an Overview

The I404 is a very flexible instrument which uses a charge measurement method that may be unfamiliar to you. This section gives you an overview of how incoming signal current is turned into readings, and the main features of the device. Full details are in the later sections of this manual.

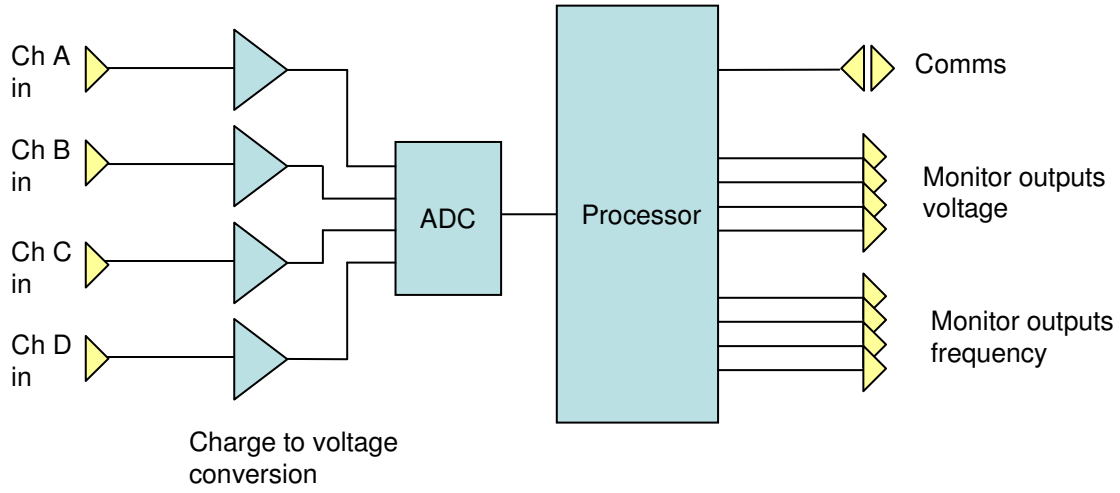

Figure 3. I404 block diagram.

The I404 has four parallel input channels which convert very small currents to measureable voltages. The voltages are measured in quick succession by an ADC (analog to digital converter). The resulting binary values are converted to current readings in amps by applying calibration factors. These currents can be requested over the communication link, and are also used to drive the monitor outputs. Let's start by looking at the measurement process in a little more detail.

8.1 Current measurement process

Because all four channels are identical and work in synchronization, we can focus on a single channel. Imagine there is a small current that you wish to measure, which may be varying in time, as shown on the following graph.

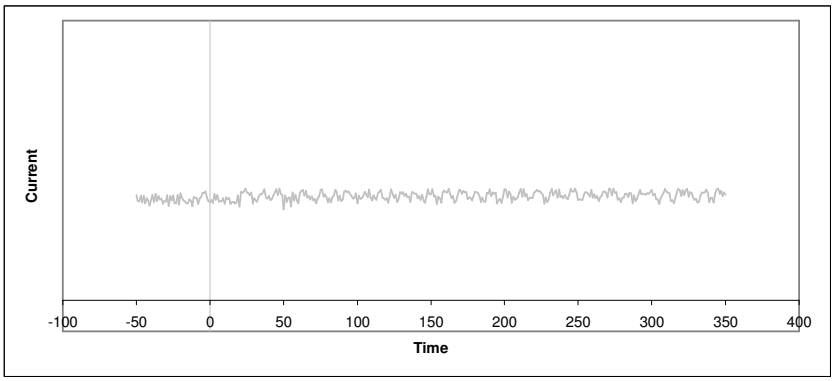

Figure 4. A current to be measured

A conventional current to voltage conversion method would convert this current into an equivalent voltage, and this voltage would be converted to a number by an ADC (analog to digital converter). However this method is less suitable for measuring very small currents because of signal to noise limitations. The I404 therefore uses a method called gated integration instead.

Imagine that at some point in time (zero on the graph), you start accumulating (integrating) this current on a capacitor. The capacitor will charge up, and an increasing voltage will therefore appear across the capacitor.

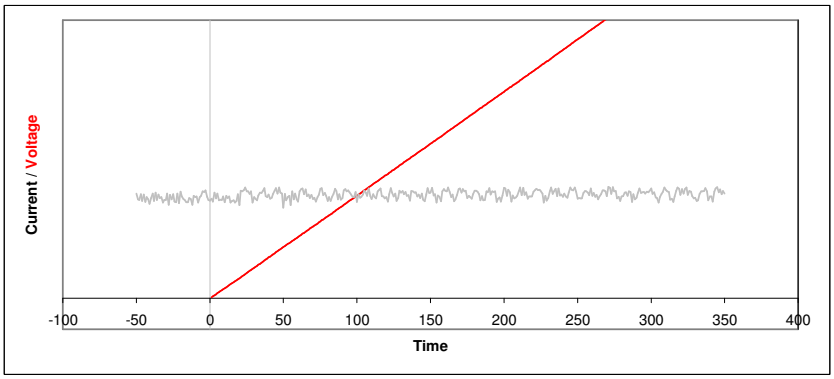

Figure 5. Voltage on a capacitor that is connected at time zero

If we measure this voltage with an ADC, we will know the charge on the capacitor at the time of the conversion. If we measure the voltage at two defined times, we will know the increase in charge over a known time interval.

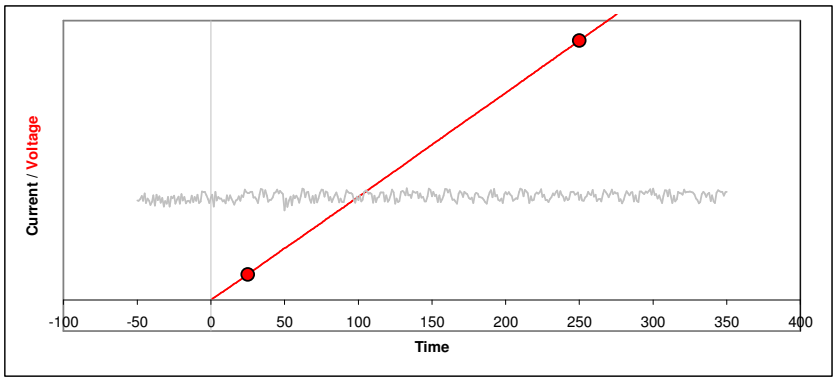

Figure 6. Capturing the voltage at two times

From this we know the average current during that time interval, because average current is simply charge divided by time. The time interval is called the integration period.

We cannot allow the voltage on the capacitor to simply increase for ever. The ADC has a specified input voltage range, and there is little point in exceeding it. Therefore we must discharge the capacitor periodically, and this takes some time, typically 20 µsec. Then we can restart the cycle.

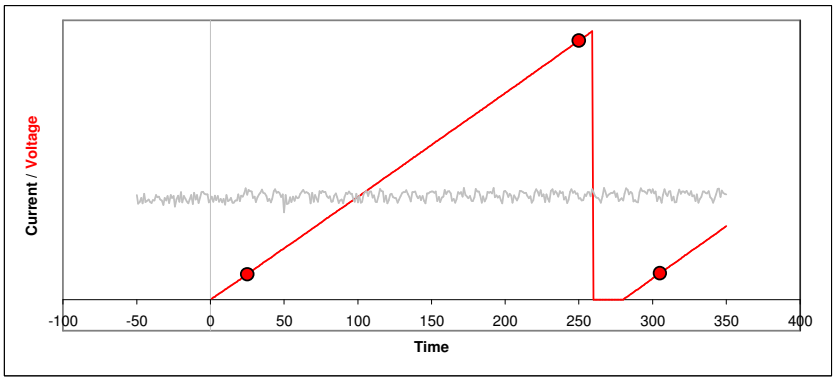

Figure 7. Discharging the integration capacitor and starting a new cycle.

The process of charging the capacitor and discharging to reset is called gated integration. The length of the integration can be controlled in the I404 in the range 100 µsec up to 65 seconds, and typical working values are in the range 100 µsec to 1 sec.

Notice that the first ADC conversion does not take place immediately when the integration starts. This is because the signal is unstable just after the reset, so we wait a time called the settle time before making the first conversion. This time is normally set to 25 µsec. The settle time can be adjusted, but it is a detailed parameter that doesn't usually need to be worried about.

We can get a running measure of the current by simply repeating the integration cycle as many times as we want. Each time, we can divide the measurement of charge that is the difference between the ending and starting ADC values by the time interval between them to get the current

reading. In the figure, the blue bars indicate the readings; each is the final ADC value minus the starting ADC value for that integration.

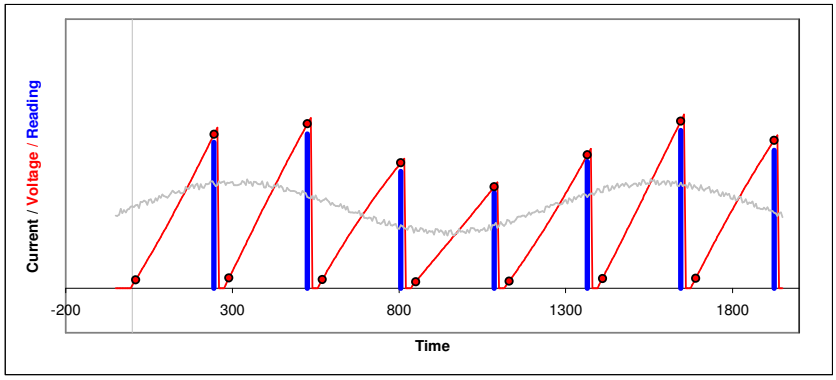

Figure 8 Repeated integrations to sample a continuous current signal.

There are some points to note. Firstly, notice that the readings are very clearly linked to the time of their integration. Because of the resets, there is no influence at all from earlier integrations. Next, notice also that we get no information about how the current may have varied within each integration - we see only the average. Finally, notice that we are not measuring at all during the resets. If you choose the shortest available integration times, the reset time might be a noticeable fraction of the overall time.

Why would you choose any particular integration time? The first consideration is the size of current you expect to measure. For a given charge integrating capacitor, the longer the integration, the smaller is the maximum current you can measure, and the more sensitive the I404 is to very small currents.

The next consideration is timing. If the current you are measuring is only present in a short pulse, there is little point in integrating longer than this, because you will simply be measuring extra noise. If the current is continuous but has variations that you wish to measure, then you must have integrations short enough to be sensitive to the variations, rather than smoothing them out.

The final consideration is filtering. A given integration time, used repeatedly to measure a continuous current, acts as rectangular low-pass filter. This has the property of completely suppressing frequencies in the signal which correspond to the integration period. If you are troubled by 60 Hz noise, for example, then using an integration period of 1/60 seconds will eliminate the problem. So will any integer multiple of that period. A good choice is 100 msec, as this is five times the 50 Hz period, and six times the 60 Hz period.

The I404 provides a lot of flexibility in how measurements are made. Let's look at some of the parameters.

8.2 Current ranges

If you use the PSI Diagnostic host program to control the I404, you will see that we have pre-defined some useful current ranges to choose from, to cover the whole dynamic range. In Expert Mode, you can directly set the parameters that affect current range yourself. These are the integration time and the selection of integration capacitors. The I404 calculates the resulting full scale range, making allowance for component tolerances and other factors.

8.3 Resolution and averaging

The I404 has features that improve the precision of the data by taking multiple readings and averaging them. Firstly you can take multiple ADC readings in the same integration.

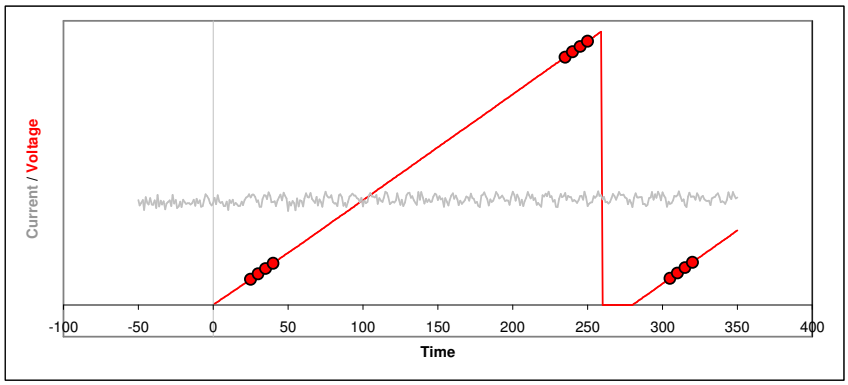

Figure 9. .Multiple ADC readings on each integration.

Secondly, you can average the data from several integrations, which themselves may have one pair or several pairs of ADC readings. For example, each group of four integrations in figure 8 could be averaged together to form a single reading.

Both of these two techniques effectively increase the digital resolution of the results, and the use of multiple integrations in particular will improve the signal to noise ratio. As always, the trade-off is less time resolution.

8.4 Triggering

In many cases you will need to coordinate the I404 measurements with external events. You can preset the I404 with all the measurement parameters such as range (integration time and capacitor selection), averaging settings and so on, then initiate it ready to respond to a trigger signal. Measurements will start as soon as the trigger arrives.

8.5 Self-testing and calibration

The I404 can calibrate itself on all channels fully automatically, and it stores the resulting factors so that it can provide results in physical units (amps or coulombs). You can also turn on the calibration current at any time and send it to any channel to check that the device is working correctly.

8.6 Monitor outputs

The I404 has monitor outputs, both analog voltage and frequency (TTL pulses). These correspond to the currents being measured on each channel, relative to the full scale in use. However you can also ask the I404 to put out X and Y position values on two of the monitor outputs instead.

9 Installation

9.1 Mounting

The I404 may be mounted in any orientation, or may be simply placed on a level surface. A fixed mounting to a secure frame is recommended in a permanent installation for best low current performance, as this can be degraded by movement and vibration. Four M3 through holes are provided in the base on a 152 mm by 144 mm rectangular pattern (see figure 2).

The mounting position should allow sufficient access to connectors and cable bend radii. 100 mm minimum clearance is recommended at either end of the device.

Best performance will be achieved if the I404 is in a temperature-controlled environment. No forced-air cooling is required, but free convection should be allowed around the case.

9.2 Grounding and power supply

A secure connection should be made using a ring lug, from the M3 ground lug to local chassis potential. This is the return path for any high voltage discharge passing via the I404.

The I404 is usually supplied with a suitable power supply. If you wish to use your own power supply, then +24 VDC power should be provided with the following minimum performance:

Output voltage	+24 +/- 0.5 VDC
Output current	500 mA minimum, 2000 mA maximum
Ripple and noise	< 100 mV pk-pk, 1 Hz to 1 MHz
Line regulation	< 240 mV
Connector	2.1 mm jack, +24 V on center conductor

The I404 includes an internal automatically re-setting PTC fuse rated at 1.1 A. However the external supply should in no circumstances be rated higher than the I404 connector limit of 5 A, and a maximum of 2 A is recommended.

9.3 Connection to signal source

9.3.1 Typical setup

Figure 10 shows one typical installation in schematic form. Four PIN diodes operated in photovoltaic mode (self-biased) are connected to the four inputs of the I404. The diodes are physically arranged in a quadrant pattern, so that beam position information can be obtained by the relative sizes of the four signals. The measured current returns to the diodes via the signal

cable screens. The example shows data taken out to a control system as TTL pulse rate, but it could also be taken as analog voltages, or as data on the communications link.

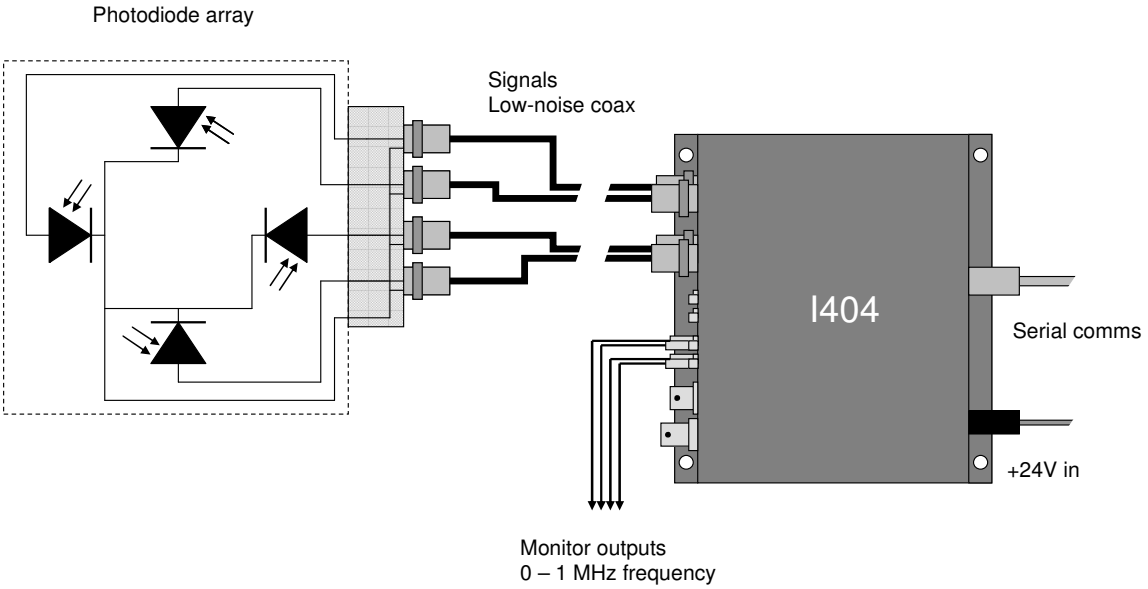

Figure 10. Schematic I404 installation for PIN diode readout

Figure 11 shows an alternative installation to illustrate some other options. The I404 is reading out quadrant ionization chamber electrodes, and also provides the bias voltage for the chamber. The biased electrode is shown schematically behind the readout electrodes: it will be the anode or cathode of the chamber depending upon the bias polarity. A gate input is shown which could provide a trigger to synchronize measurements to an external event. Monitoring is from the analog outputs. In this case the measured current loop is completed through the bias voltage lead and the bias power supply module in the I404.

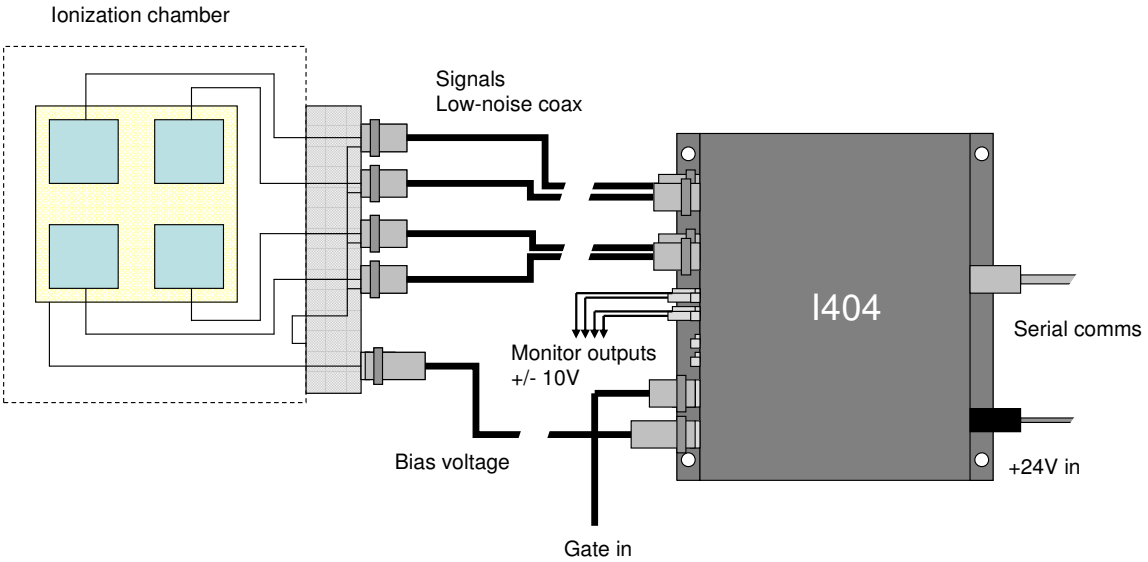

Figure 11. Schematic I404 installation for ionization chamber readout

Refer to section 21 in this manual for general guidance on making low current measurements. The I404 should be located as close to the source of the signal as possible. Long signal cables increase the chances of seeing unwanted signals and noise. A maximum length of five metres is advised. Longer cables may be used, but the lowest detectable current will be increased. If the length is greater than five metres, the accuracy of the measurement can be affected under some circumstances. Contact Pyramid Technical Consultants, Inc. for detailed guidance.

9.3.2 Signal cables

Coaxial cable should be used, and we strongly recommend a low-noise cable to prevent spurious signals arising from cable flexing or vibration. A suitable type is Belden low-noise RG-58 9223. Other types with equivalent specification can be used.

9.3.3 Signal current path

The current you are measuring passes along the cable inner conductor to the I404 input. It flows to the local circuit ground via the amplifier power supply, due to the operational amplifier action. The necessary return path then depends upon the energy source that originally drove the measured current. If there is no return path, you will see no current. This is quite a common fault in current measurement set-ups. Always think about the path the measured current must follow. It is not essential that you understand the details of the I404 input amplifier circuit in the figures below - the important point is that you can assume that current from a source following into the amplifier <u>must</u> be balanced by a current from the amplifier ground back to the original source.

Figure 12 shows the situation for photodiodes, where the loop is simply completed via the coaxial screen. If the screen was not continuous, and the diode cathode was common to beamline/system ground, then an alternative path would be via general ground and the I404 chassis.

Figure 13 shows the situation for an ion chamber biased by the I404 auxiliary supply. Here the return current must flow through the high-voltage supply. If you use an independent bias supply, instead of the I404 internal supply, then the situation is similar, except that the connection from the ground point of the supply to the internal ground of the I404 must be made by an external link, generally from the chassis of the supply to the chassis of the I404. This can be a discrete wire link, or they can both be connected to laboratory ground.

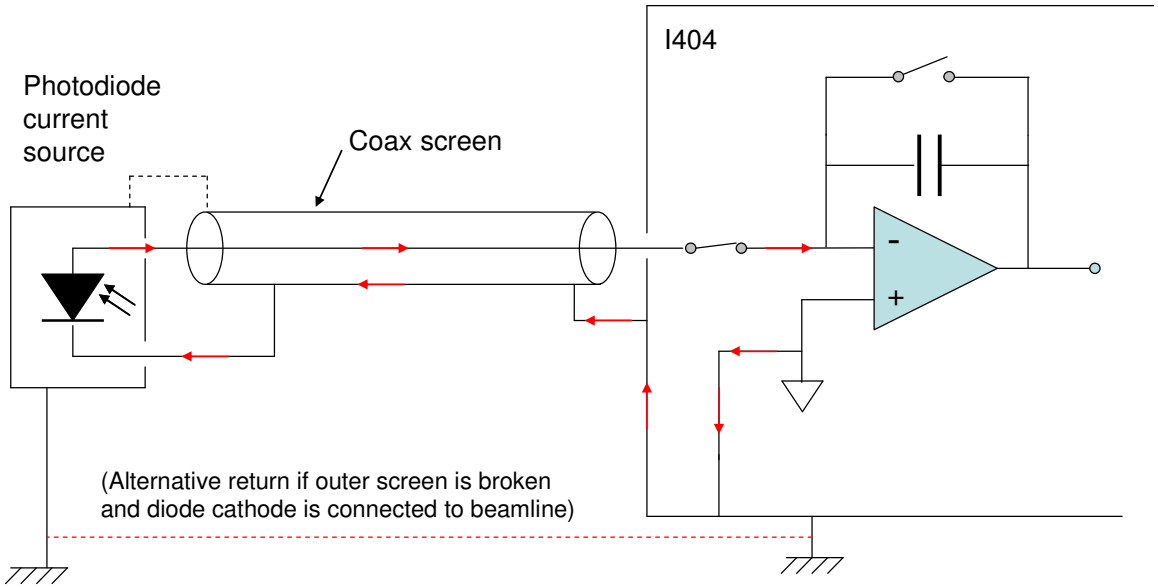

Figure 12. Path of measured current (photodiodes).

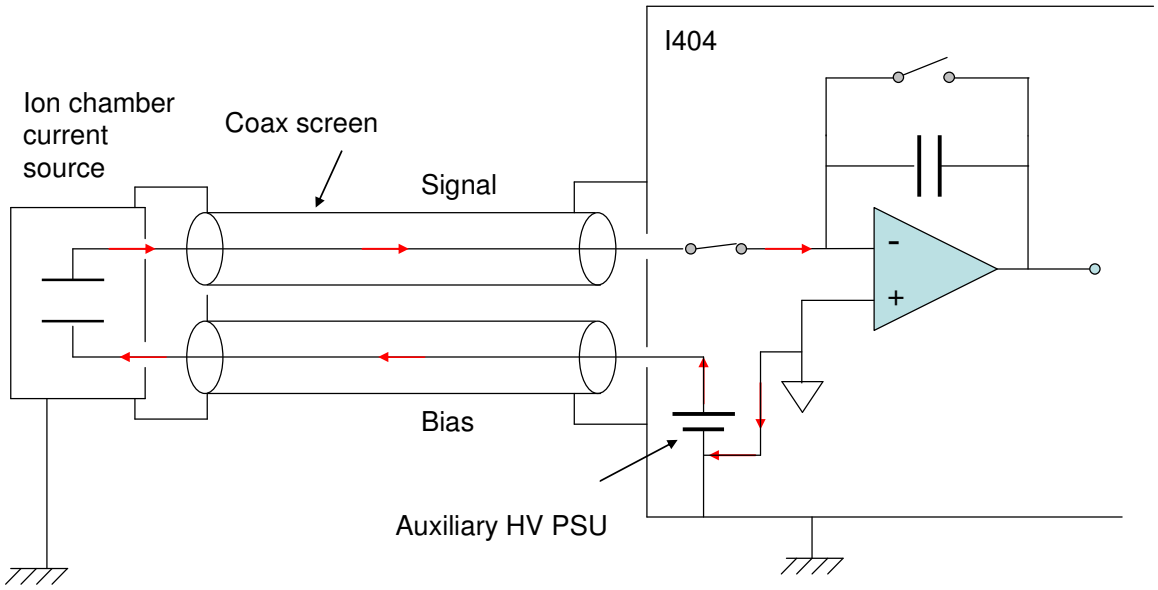

Figure 13. Path of measured current (ion chamber).

10 Getting Started Using ASCII Communication

Before installing the I404 in its final location, and if it is the first time you have used an I404, we recommend that you familiarize yourself with its operation on the bench, using the ASCII communications. You can check the unit powers up correctly, establish communications, run the internal calibration procedure, and read the internal calibration current.

1) Inspect the unit carefully to ensure there is no evidence of shipping damage. If there appears to be damage, or you are in doubt, contact your supplier before proceeding.

2) Connect the 24 V DC power supply but no other connections. The power LED should illuminate when the power is applied, and the link and status LEDs will go through a power-up cycle.

3) Make a connection to a PC serial port. A three wire lead terminated in a six-pin mini-DIN male connector (PS/2 mouse type) and a nine-pin D female is required. A suitable adaptor cable is available from Pyramid Technical Consultants, Inc. When the connector is pushed home in the I404, the "optical" LED should extinguish and the "RS232/485" should illuminate.

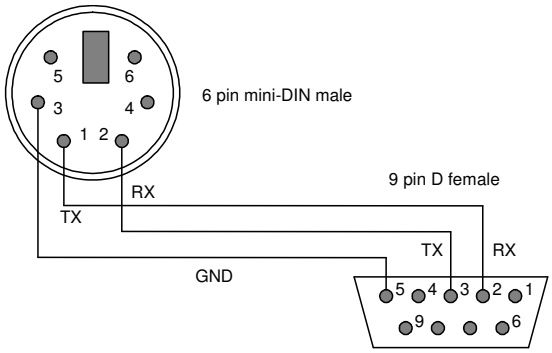

Figure 14. RS232 connection cable from the I404 to a PC serial port (DB9). Pins are shown looking at the face of the connectors.

4) Set the address rotary switch to position "4" (address 4 - this is an arbitrary selection for this exercise) and the mode rotary switch to position "3" (RS-232 ASCII communication, 115 kbps).

5) Configure a Windows Hyperterminal session to use COM1 (or other available port on your PC) as shown in the following figures. A suitable Hyperterminal file is provided on the I404 software CD-ROM. Unfortunately Hyperterminal is not included with Windows Vista or Windows 7. You can copy the relevant files (hypertrm.dll and hypertrm.exe) from an XP machine to your Vista or Windows 7 machine, or use one of many free terminal programs that are available, such as PuTTY or RealTerm.

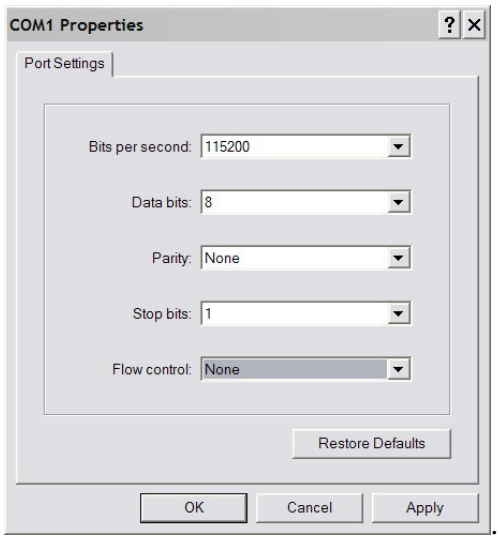

Figure 15. Hyperterminal COM port setup.

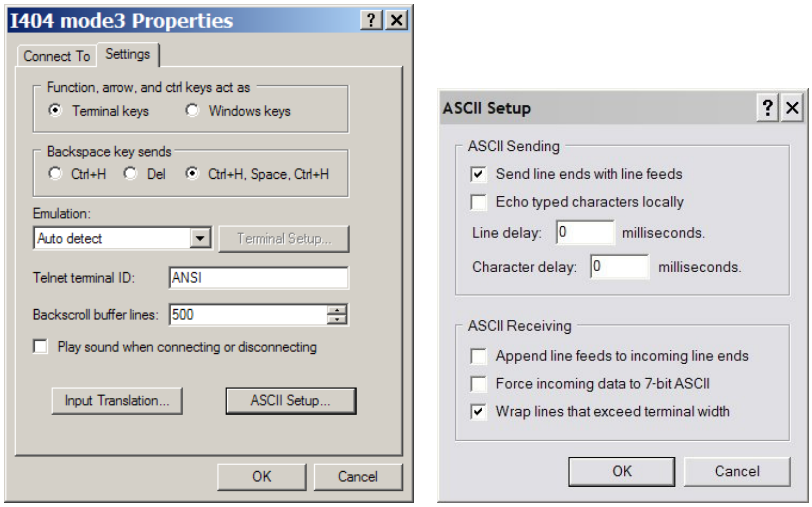

Figure 16. Hyperterminal terminal settings

6) Type "#?<CR>" to query the active listener. You should get the response "4". You are communicating successfully with the I404 set at address 4. If you hear your computer's bell sound when you send the string, the I404 did not understand it, probably because there was a typing error. If you make any errors while typing, use the backspace key and re-type from the error.

7) Type "calib:gain<CR>". The characters can be upper or lower case. The I404 will perform its internal calibration sequence.

8) Type "calib:gain?<CR>". The I404 will return the gain factors for the four channels.

9) Type "read:curr?<CR>". The I404 will do a measurement and return the integration period it used, the measured current values for each of the four channels, and a byte which says if any of

the channels went overrange. The current values should be close to background. If you repeat "read:curr?<CR>" a few times you should see the readings change due to background noise.

10) Type "conf:range 1e-6" to set a 1 microamp full scale range.

11) Type "calib:source 1" to turn on the internal 500 nA calibration source to channel 1 (channel A).

12) Type "read:curr?<CR>". You should see a reading close to 5e-7 A on channel 1.

13) Type "*rst<CR>" to reset the I404. Your unit is functioning correctly and is ready to be integrated into your system.

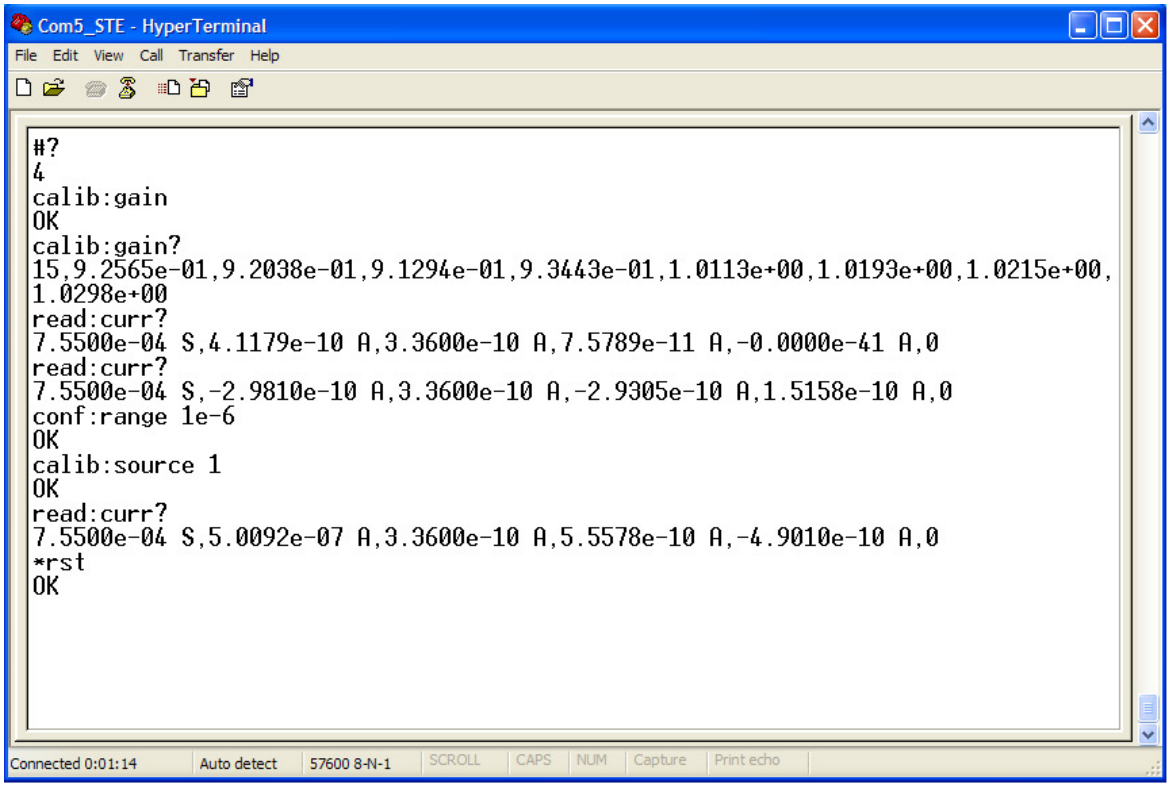

Figure 17. Example Hyperterminal session

14) If you wish to explore the ASCII communication capabilities of the I404 more fully, refer to the commands list in section 19. You may also wish to try out the terminal mode, which provides feedback from the I404 to every message you send, not just query messages, and is therefore more user-friendly.

11 Getting Started using the PSI Diagnostic Host Program

11.1 Installing the PSI Diagnostic Program

The I404 is supplied with software programs and drivers on a USB memory stick. We recommend that you copy the files into a directory on your host PC.

The PSI Diagnostic Host program runs under the Microsoft Windows operating system with the 2.0 .NET framework. It has been tested with Windows XP, Windows Vista and Windows 7. The .NET framework has to be installed before the PSI Diagnostic. Most new PCs have .NET already installed. It can be downloaded from the Microsoft web site at no charge. The installer will alert you if the .NET framework needs to be installed.

Install the PSI Diagnostic by running the PTCDiagnosticSetup.msi installer, and following the screen prompts. Once the program has installed, you can run it at once. If you wish to view the files that have been installed, navigate to Program Files\Pyramid Technical Consultants, Inc.\PTCDiagnostic.

The screenshots in this user manual were taken from PSI Diagnostic versions 4.51 and 4.55. The screens you see may differ slightly if you are running a different version. The first version to support the I404 was 4.30. Do not attempt to use an earlier version.

11.2 Connecting to the I404

The PSI Diagnostic is a stand-alone program which allows you to read, graph and log data from the I404, and set all the important acquisition control parameters. It supports communication via any of the interfaces, and uses the binary protocol, as opposed to the ASCII protocol, for higher performance. For some applications it may be adequate for all of your data acquisition needs.

Once the program has installed, you can run it at once. It will allow you to connect to the I404, and, depending upon your interface setup, multiple additional devices at the same time. The PSI Diagnostic uses the concepts of ports and loops to organize the connected devices. A port is a communications channel from your PC, such as a COM port or an Ethernet port. Each port can be a channel to one or more loops, and each loop may contain up to 15 devices.

Connect 24 V DC power but no other connections. The power LED should illuminate when the power is applied, and link and status LEDs will go through a power-up cycle.

It is simplest to connect the I404 directly to the PC via its RS-232 port (figure 18), assuming you are lucky enough to have a PC with a serial port. Set the mode switch to position “0” (RS-232 115 kbps binary). If you don’t have a host computer with a serial port, then a basic fiber-optic loop controller like the Pyramid Technical Consultants, Inc A300 will allow you to connect via Ethernet. The address switch can be set to anything between 1 and 15.

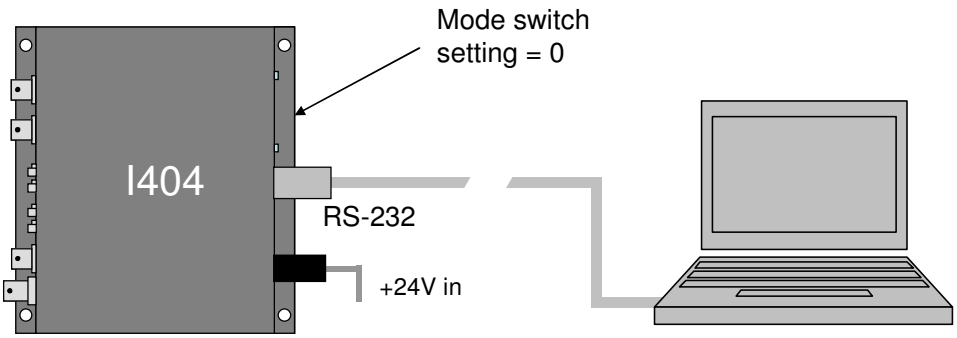

Figure 18. Direct RS-232 connection to the I404.

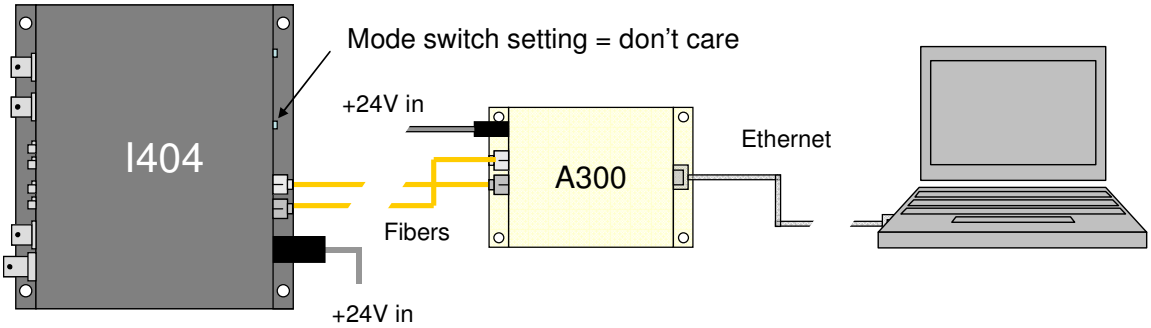

Figure 19. Connection through an A300.

The Diagnostic will see the simple configuration in figure 18 as a COM port with just the I404 on it. The direct RS-232 connection does not allow more than one device to be seen through that port. Contrast this to the situation where you have a loop controller, such as the A300 or A500 and the I404 is connected to the controller via a fiber-optic loop. In this case the loop controller is identified at the first level, the loops at the sublevel below, and then I404 as a device on a loop. The illustrations in the rest of this section are for the case of connecting through a COM port. The I404 screens will look the same for any other connection arrangement, aside from the connection details in the title bar.

Start the PSI Diagnostic. It will search the available ports on your PC and present a search list for device discovery. Figure 20 shows a case where three COM ports have been found, plus a selection of previously-entered IP addresses. When you press "Start" the program will search for loops and devices on all checked options.

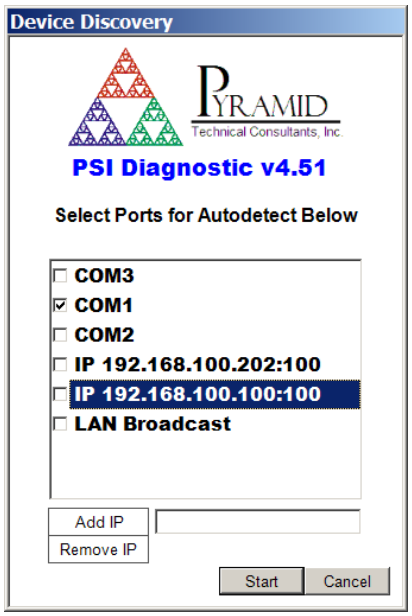

Figure 20. PSI Diagnostic Search Utility

11.3 Data screen

A few seconds after you click the "Start" button, the program should find the I404 (plus any other devices). Clicking on the I404 entry in the explorer list in the System window will open the I404 window. In the following screenshot an I404 has been found on RS-232 port COM1. The address switch on the I404 was read as "3", but this has no relevance for a connection via the serial port.

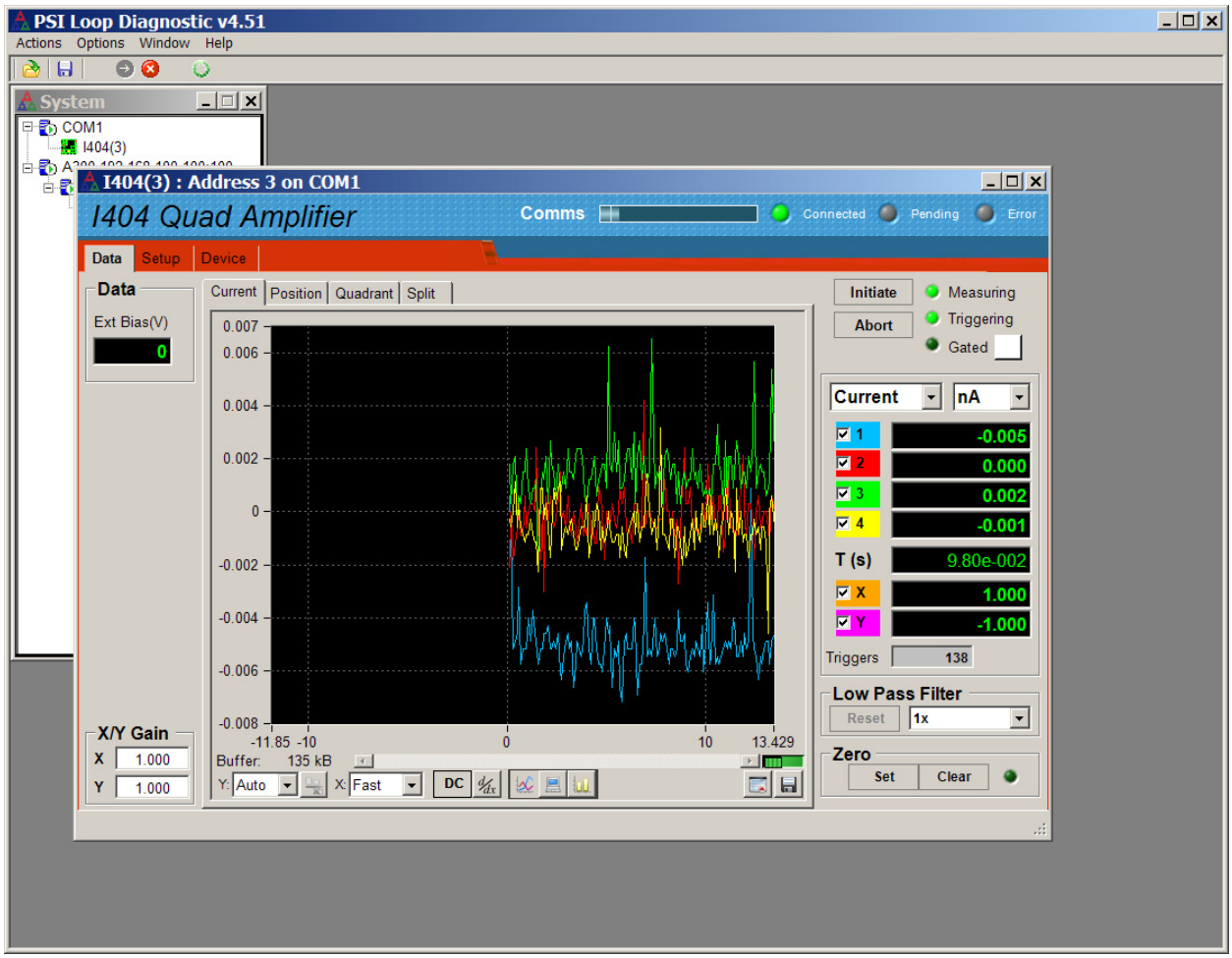

Figure 21. Data/current tab: I404 connected via COM1 and running with default settings, showing background noise.

The device should be collecting data with default settings, and you will see a strip chart display of the four current readings, reading background noise and auto-scaled to full scale. Now you can explore the screen controls and readbacks to get acquainted with the I404.

Initiate	This button starts the I404 measuring with the parameters set on the setup tab. If you are in internal trigger mode, then the acquisition will start at once. Otherwise the acquisitions will start when the external starting trigger is detected on the gate input connector. The number of readings in the initiate in progress is displayed in the Triggers box. Note that after the I404 powers up, it starts measuring continuously on its 8 nA range with internal triggering. The LEDs indicate whether measurements are in progress, whether triggers are being detected, and the state of the external gate input (it displays the state of the input irrespective of whether it is being used to trigger

	measurements).
Abort	This stops an acquisition sequence in progress.
Current / charge	You can display the I404 reading in pA, nA, µA or amps, or pC, nC, µC or coulombs. The check boxes determine how the data is displayed.
T	The integration time in use is displayed, in seconds.
X, Y	If you have set up the I404 to measure the output of a quadrant or dual electrode beam position monitor, the positions results will be displayed.
Low-pass filtering	You can set up data filtering by the PSI Diagnostic, to make a fluctuating value easier to read. The filter type is a single pole IIR (infinite impulse response) digital filter. The number in the drop down list is the parameter A in the filter equation $Y_i = X_i/A + (1 - 1/A)Y_{i-1}$, where Y_i is the latest output of the filter, Y_{i-1} is the prior output of the filter and X_i is the latest reading from the I404. 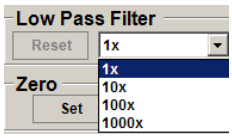 Note that this filtering by the PSI Diagnostic is in addition to the data averaging done in the I404 itself. The Reset button clears past readings from the filter. The filtering affects the numeric display, the graphic display and any data that you capture. Note that this only applies for PSI Diagnostic versions 4.50 and later. In prior versions, only the numeric data was affected.
Zero	The PSI Diagnostic will capture the latest reading and subtract it from all subsequent readings if you click the Zero button. Pressing Clear stops this. Note that if you press zero when there is a real signal current, this current will then be hidden. The zeroing affects the numeric display, the graphic display and any data that you capture. Note that this only applies for PSI Diagnostic versions 4.50 and later. In prior versions, only the numeric data was affected.
Data	If you have the external bias voltage option, the readback of the voltage is displayed here.
X/Y gain	These are factors applied by the PSI Diagnostic to raw position data generated by the I404, which are in the range -1 to +1. This should not be confused with the vertical and horizontal scaling of the data plot.
Y:	This controls the vertical scaling of the data plot. It can be automatic, or various fixed proportions of the full scale of the range in use.

	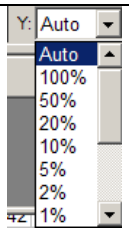
X:	This controls how fast new points are added to the data plot. 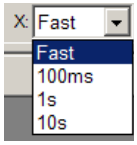 This is generally limited by the speed of your PC. If the averaging time has been set to a large period, then this will override the update rate you set here.
Data buffer	The PSI Diagnostic collects data coming from the I404 as fast as it can into a buffer. If the I404 rate, set by the integration time and the communications channel bandwidth, is relatively low, then every data point is logged. At high rates some readings will be lost, but you can see this because every reading gets a trigger count, and missing values are evident. Spooling data into the buffer can be halted with the slider . The plot can be cleared with the Clear Plot button . The data can be written to a nominated .csv file with the File button . The buffer is cleared by a new initiate command. The kB and Buffer indicator show how much data is currently in the buffer..
Couple	Selecting AC coupling removes any DC component from the graphic display only.
Display mode	There are various ways to plot the data. There are: strip chart . or bar chart (histogram) . In histogram mode you can place a cursor on any channel by clicking on it. Click again to clear the cursor. Scope mode is a variant of the strip chart. One full screen of data is displayed at a time, rather than the continuous scrolling of the strip chart. The derivative button displays the difference between successive values, and is useful if you are looking for sudden changes in the signal. It

	only affects the graphic, not the numeric or logged data. The AC/DC toggle DC / AC is similar to zero subtraction, but only affects the graphic. When AC is selected, the average of all the display values for a channel is subtracted from the values before they are plotted. It is thus like a rolling offset removal or high-pass filter.

Notice that there are three subsidiary tabs under the Data tab. You have been looking at the default, labeled current. The other subsidiary tabs display beam position monitor readout data. This will be described in more detail in section 14.

11.4 Setup screen

Click on the "Setup" tab. Here you can adjust measurement parameters such as integration period, feedback capacitor, averaging, set the high voltage, and use the built-in calibration facility. When you first launch the PSI Diagnostic, it will not be in Expert Mode, and you will see some boxes are grayed out. If you want to switch modes, go to the Options menu, and check "Expert".

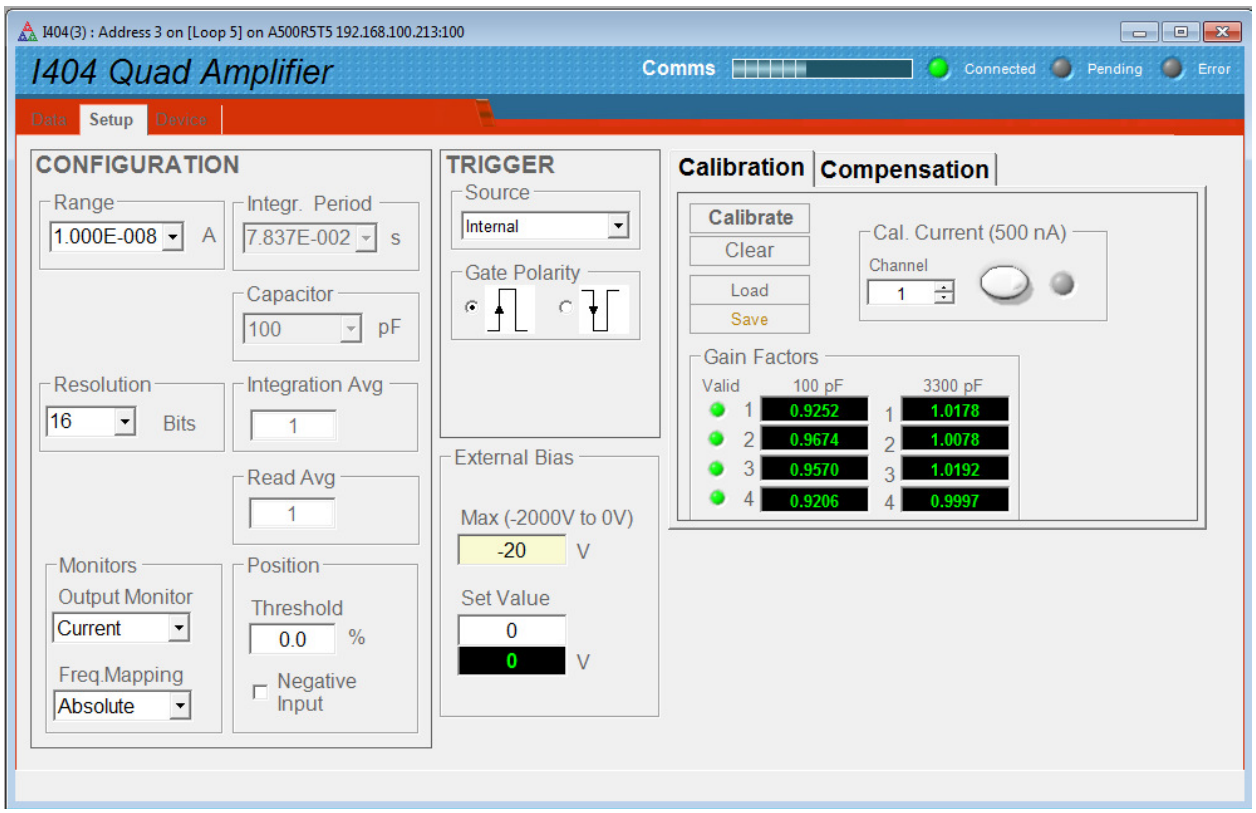

Figure 22. Setup tab: I404 connected via an A500 controller and running in Basic Mode.

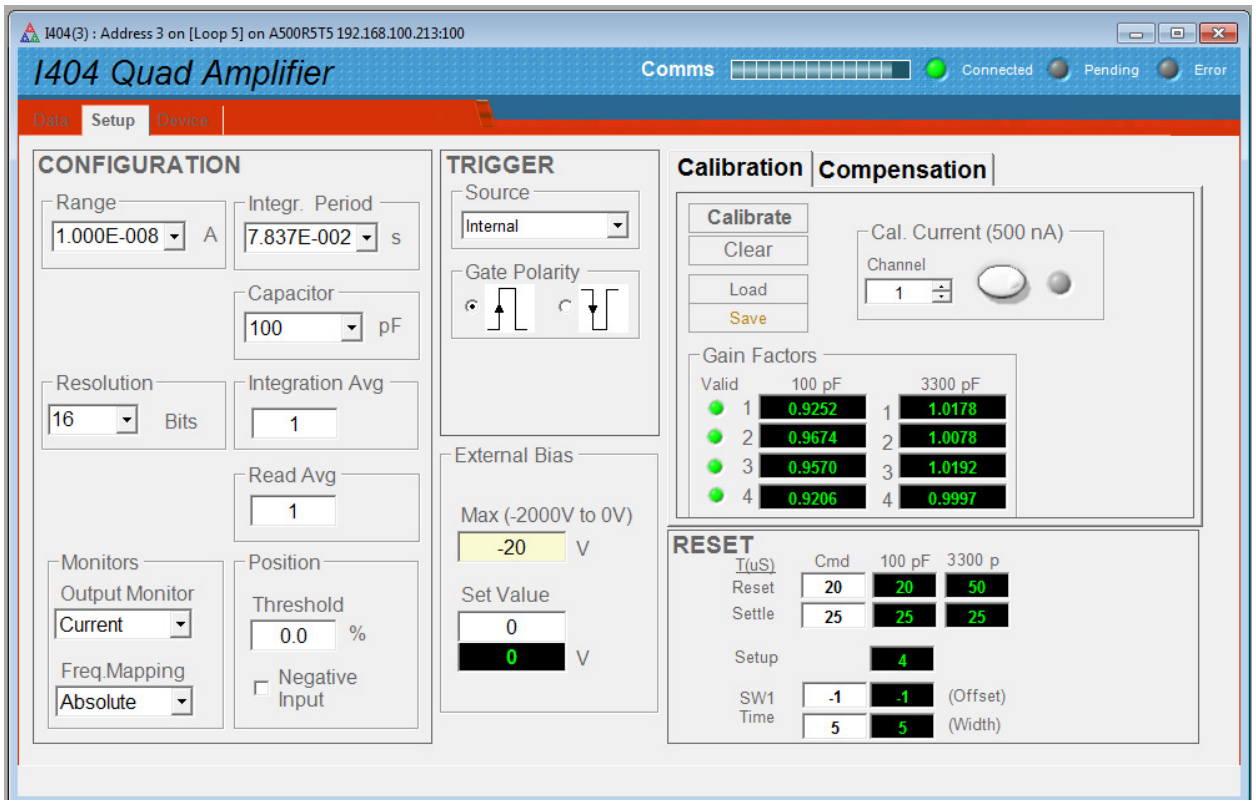

Figure 23. Setup tab: I404 running in Expert Mode.

You can investigate all the screen controls and displays:

Range	There are eight pre-defined current ranges that cover the full dynamic range of the I404. The 8 nA range is included because it has a 100 msec integration period, and is thus immune to mains voltage interference. This is the range that the I404 measures on after it has powered up.
Resolution	This controls the averaging that is done by the I404. As you increase the requested resolution from 16 up to 20 bits, the number of ADC conversions per integration, and the number of integrations per current reading, is increased.
Monitors	The Output Monitor selection lets you choose whether the monitor outputs map the input currents, or a position function calculated from the input currents. There are two position calculation options. Split means that there are two independent calculations, such as you would need if you have two independent one-dimensional sensors. Quadrant means the X and Y values are both calculated from all four inputs, such as you would need if you have a quadrant sensor. Freq. Input Range determines in detail how the frequency monitor output is mapped if you have selected to map input currents. “Bipolar” causes the absolute value of the currents to be mapped to the frequency range. “Positive” causes only positive currents to be mapped (negative currents

	are set to zero) and "negative" causes only negative currents to be mapped. These selections only affect the monitor outputs. They do not affect what the I404 measures, or what you can see via the communications link.
Integration period	(Expert Mode only) You can set the integration period directly. The resulting current range will be displayed.
Capacitor	(Expert Mode only) You can select the small or large feedback capacitor. The resulting current range will be range will be displayed.
Integration Avg	(Expert Mode only) You can select the number of integrations that are averaged into each current reading. The resulting effective resolution will be displayed.
Read Avg	(Expert Mode only) You can select the number of ADC data points that are averaged into each current reading. The resulting effective resolution will be displayed. There are constraints on the combination of Integation Avg and Read Avg due to timing limitations. If you exceed the constraints, the I404 will use the nearest available combination.
Position	The position Threshold allows you to specify the percentage of full scale that a signal current must have before it gets included in a position calculation. Below the threshold, it gets set to zero. This is to prevent the position function becoming very noisy when the currents are very small. The Negative Input checkbox should be set if the signal currents going into the position calculation are negative rather than positive.
Trigger	You can select internal triggering (like autorun on an oscilloscope) or external triggering. In the latter case, if you initiate an acquisition, it will not start until the I404 sees a TTL transition on the gate input. You can set the I404 to respond to a rising or falling trigger edge.
External Bias	If your I404 has the auxiliary external high voltage option, you can set the output voltage with the Set Value box. The Max box allows you to constrain the settings to a particular maximum, for example to protect sensitive equipment that cannot sustain the maximum voltage of the supply. The feedback value is not generally as accurate as the setpoint, but does allow you to see if the supply is being overloaded. Note that your setpoint entry must have the correct polarity (to set a -1000 V supply to -600 V, you must enter "-600").
Calibrate	Clicking the calibrate button causes the I404 to execute its automatic self-calibration routine using the precision 500 nA internal current source. The gain factors will be displayed upon completion. You can save the calibration to I404 EEPROM memory, load a previously stored calibration,

	or clear to the uncalibrated state. The green LEDs alongside the gain factors indicate that the calibration is within allowed tolerance bands.
Cal Current	You can toggle the built-in 500 nA calibration source with this button, and control which channel it is directed to. This provides a useful diagnostic function.
Compensation Factors	A separate sub-tab **Compensation** gives you access to the sensor compensation gain and offset parameters. These factors can be entered by the user to compensate uneven sensor response, in applications where the I404 is reading out position. See section 14 for more details.
Reset	(Expert Mode only) You can alter the gated integrator reset, settle and setup times away from their default values. These controls are for expert use only, and the values have to be set subject to constraints of the averaging settings. Refer to section 12 to learn more about these parameters.

As an exercise, do the following. Clear the calibration, then click the calibration button, and observe that the gain factors change. Store this new calibration in the user memory. Click the calibration current button to turn on the source, and select channel 1. Select the 1 uA range, 16 bit resolution and internal triggering. Now if you return to the data tab and initiate data acquisition, you should see the 500 nA calibration current on channel 1. Try displaying the data in histogram mode. Setting 100% vertical scale should show the calibration at half of full scale.

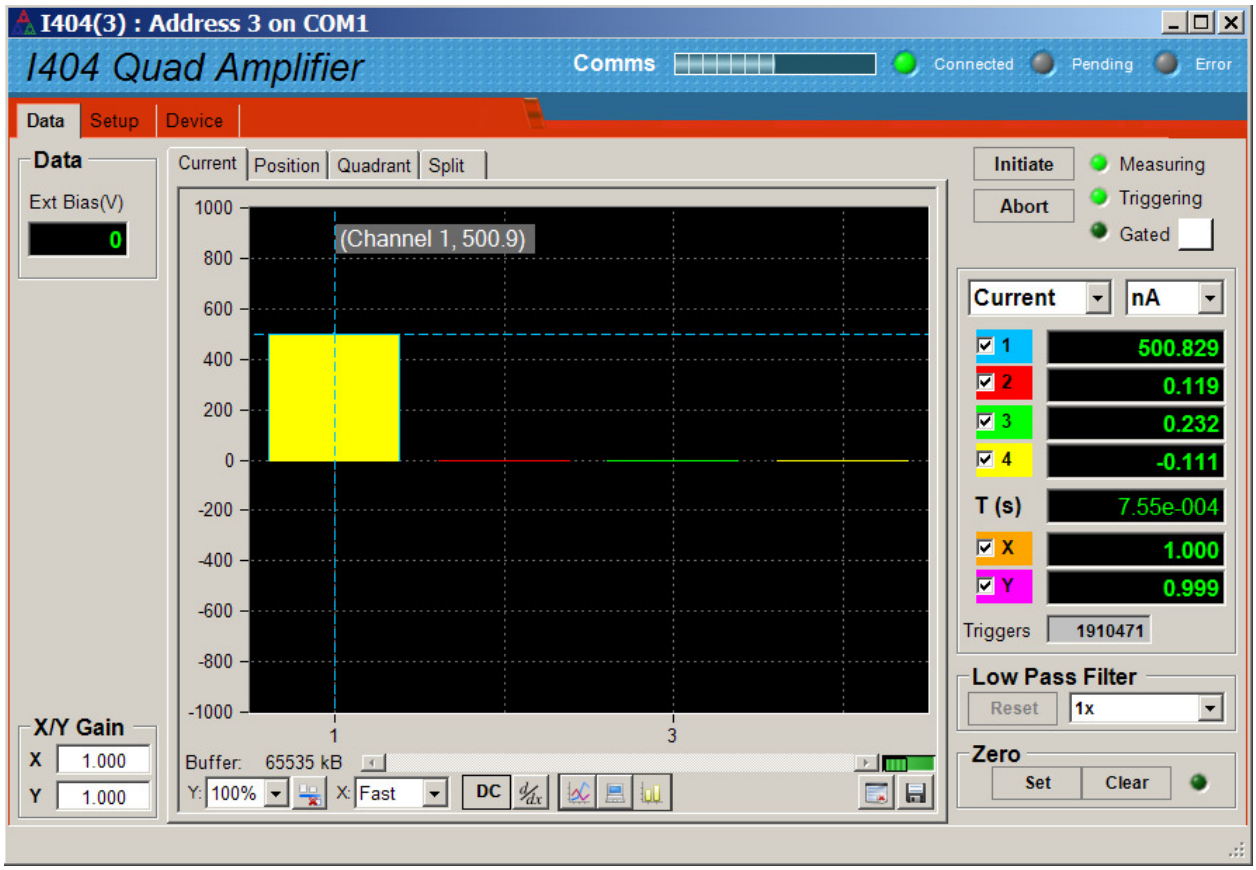

Figure 24. Internal calibration current routed to channel 1, histogram display format.

If you have suitable cables and test equipment available, you can look at the monitor output for channel 1 (channel A). You should see close to 5 V on the analog voltage output, and close to 500 kHz on the frequency output.

Try other channels, and investigate the effect of changing the range, and of changing the display from current to charge. If the calibration current is overrange, the current reading is shown in red text.

11.5 Device screen

The final major tab in the I404 window is the "Device" tab. You can check the communication link status and verify the versions of the hardware and firmware. On the right is the firmware update utility. You can use this to download firmware updates (.hex files) downloaded from the Pyramid Technical Consultants, Inc. web site.

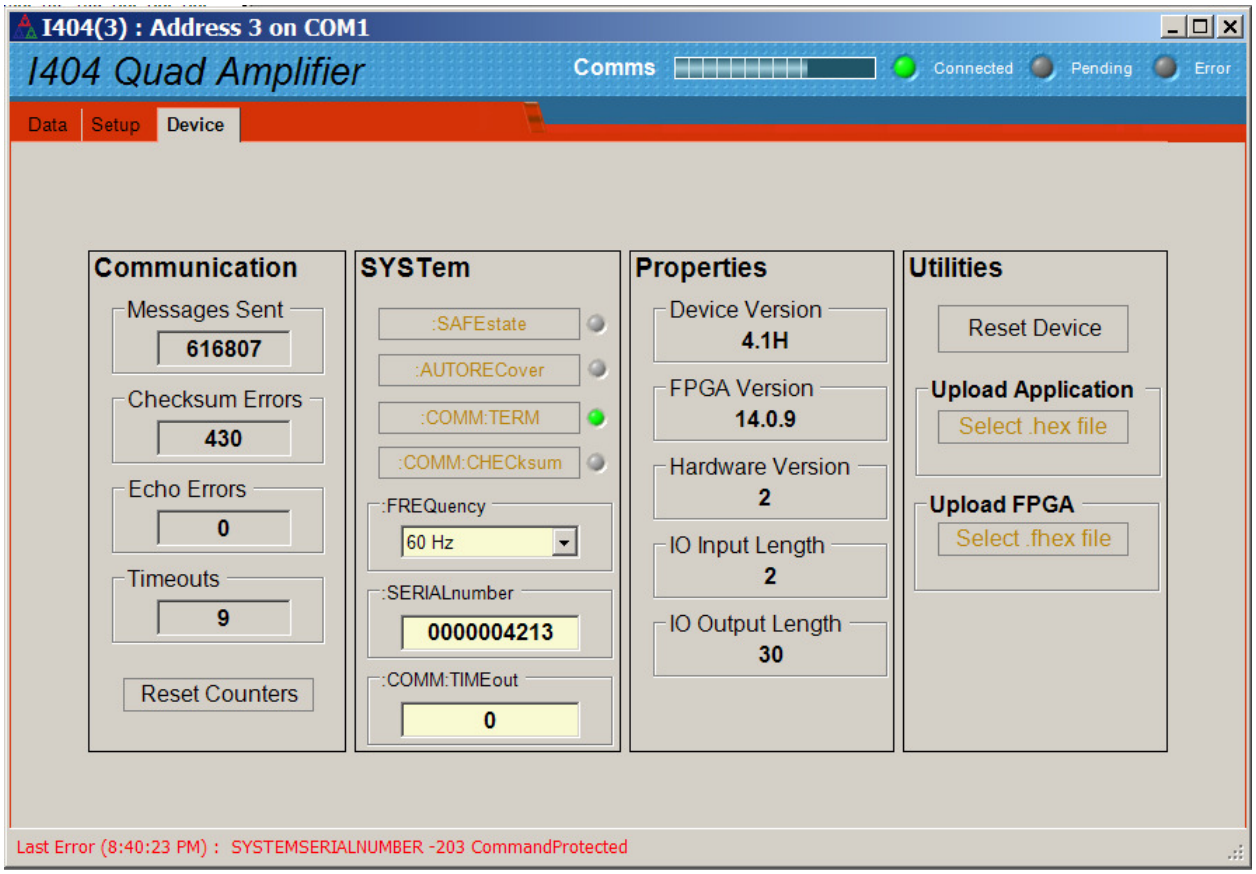

Figure 25. Device tab, showing firmware update utility controls.

Communication	The counters show details of the communications between the I404 and its host. You can click the Reset Counters button to reset the fields to zero.
SafeState	Enabling SafeState will cause the I404 to go to its defined safe state if there is a communications timeout. In particular the HV supply will be turned off.
Autorecover Comm:Term, Comm:Checksum	These controls affect behavior of the I404 when in ASCII terminal mode. You can ignore them when using the PSI Diagnostic.
Frequency	This parameter sets the averaging period that will be used for calibration. You should set it to the dominant electronic noise frequency in your environment (normally the line frequency).
SerialNumber	This is the manufacturing serial number of your device, and should be left unchanged.
Comm:Timeout	This field can be used to control how the I404 behaves if the communication link to its host is lost. Entering any non-zero integer value sets the number of seconds that the I404 will continue what it is doing if communications are lost. After that it will go to its defined safe state.

Properties	The most important fields are the first two, where you can check the installed device firmware and
Reset Device	This button causes a full warm reset of the I404. Any acquisition in progress will be lost.
Select hex file	This button starts the I404 firmware update process. It opens a file selection dialog. When you select a hex file it will start uploading to the I404 immediately. Upon completion the I404 will restart automatically, and you will see the new Device Version number displayed.
Select fhex file	This button starts the I404 FPGA update process. It opens a file selection dialog. When you select a fhex file it will start uploading to the I404 immediately. Upon completion the I404 will restart automatically, and you will see the new Device Version number displayed.

12 Principle of Operation

12.1 Gated Integrators

The I404 uses the gated integrator method. This is a particularly effective technique for measuring small amounts of electrical charge. The input signal current builds up charge on a small low-leakage capacitor in the feedback loop of an operational amplifier, with the result that the voltage at the amplifier output is the integral of the current that flows into the input.

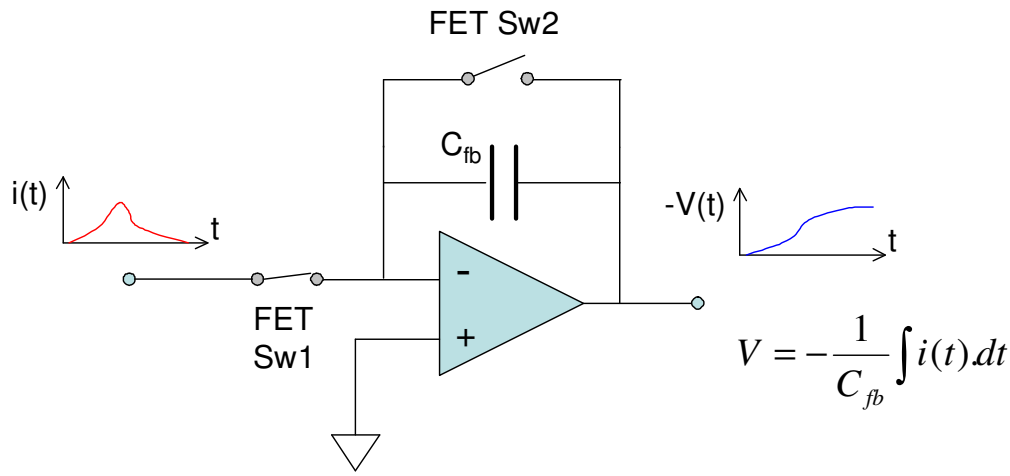

Figure 26. The basic gated integrator circuit.

Integration starts when FET switch Sw2 is opened. The current into the input can be negative or positive. The voltage at the output of the amplifier is sampled and digitized by an ADC at the beginning of the integrator ramp, then again near the end. Calibration with a stable, accurately known test current allows variables such as the exact size of the feedback capacitor, buffer amplifier gain and ADC gain to be compensated in a single gain factor. At any time t after the start of the integration, the accumulated charge is thus given by

$$q_{meas} = k(ADC_{end} - ADC_{start})$$

where k is the gain factor. The data can also be presented as an average current in the time interval between the readings, because that interval is known accurately.

$$i_{meas} = \frac{k(ADC_{end} - ADC_{start})}{t}$$

As the integration proceeds, this measure of the average current achieves increasing signal to noise ratio, as more charge is accumulated and the low pass filtering roll-off due to the increasing integration time moves to lower frequency.

The inherent integration is very effective in reducing noise, being in effect a rectangular low-pass filter with -3dB response at $0.44/t_n$ Hz and zero response at N/t Hz, N=1,2,3,…. Known

dominant noise frequencies, for example line voltage interference at 50 Hz or 60 Hz, can be completely suppressed by choosing t_{per} = 1/50 or 1/60 seconds, or integer multiples thereof.

Integration cannot proceed indefinitely because the charge amplifier output voltage cannot exceed its voltage supply rails, and because the voltage would exceed the range of the ADC that follows. It is therefore necessary to reset the integrator periodically. After the defined integration period, switch Sw2 closes to short the feedback capacitor and release the charge, so zeroing the integrator ready for the next cycle. Sw1 is opened briefly while Sw2 is closing to inhibit transients.

The reset time needs to be sufficient to completely clear the accumulated charge through the switch FET on resistance, and thus depends upon the size of the feedback capacitor. There is also a settle time allowed after opening Sw2 to start the integration before the start ADC reading is taken, to allow transients to die away. A further time associated with the reset, called the setup time, is necessary to allow all the ADC conversions to be completed at the end of the integration.

The following timing plot shows an example in which there are two integrations (Integration Avg =2), each with two ADC readings (Read Avg = 2).

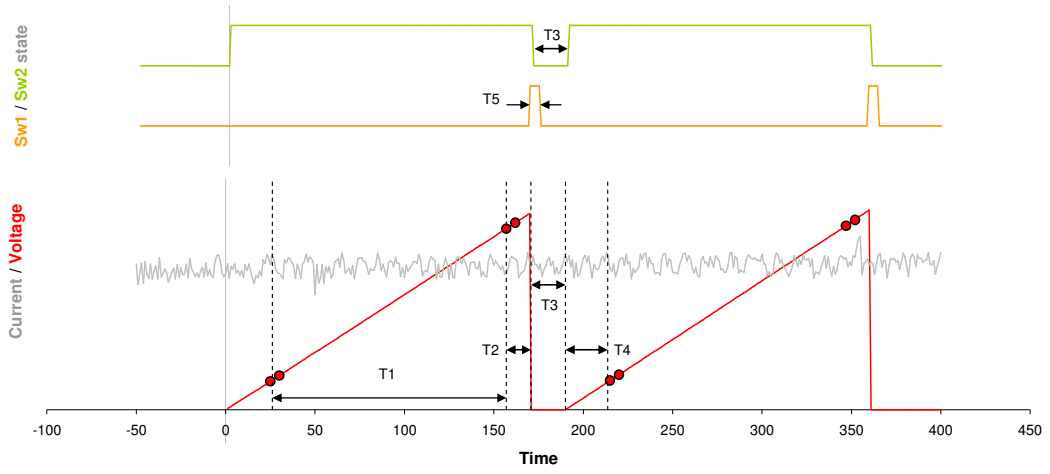

Figure 27. Example gated integrator timing diagram. T1 integration period, T2 setup, T3 reset, T4 settle, T5 Sw1 width. The Sw1 opening transition is displaced from the Sw2 closing transition by the Sw1 offset

12.2 I404 Circuit Overview

The signal inputs are protected by back to back diodes and spark gaps. Four identical gated integrator channels operate under switch control from an FPGA. A single control line to switches on every channel allows a second feedback capacitor to be added in parallel, to give the large capacitor option. A precision 500 nA current source can be switched into any of the four channels.

The ADC reads out the four integrator outputs via a multiplexer, at four microsecond intervals. All four channels are thus read out in 12 µsec. The integration cycles are similarly offset by four microseconds from each other to compensate for this.

The FPGA (field programmable gate array) controls the ADC timing and collects the readings. It performs any necessary accumulations for averaging. It puts out the monitor frequency outputs via line driving buffers, and the analog voltage monitor outputs via 16-bit DACs and output buffers. The FPGA is also responsible for the low-level communications control.

The microcontroller handles higher level communications, including parsing the ASCII command strings and generating the responses. It also monitors the readback of HV if the optional high voltage module is fitted.

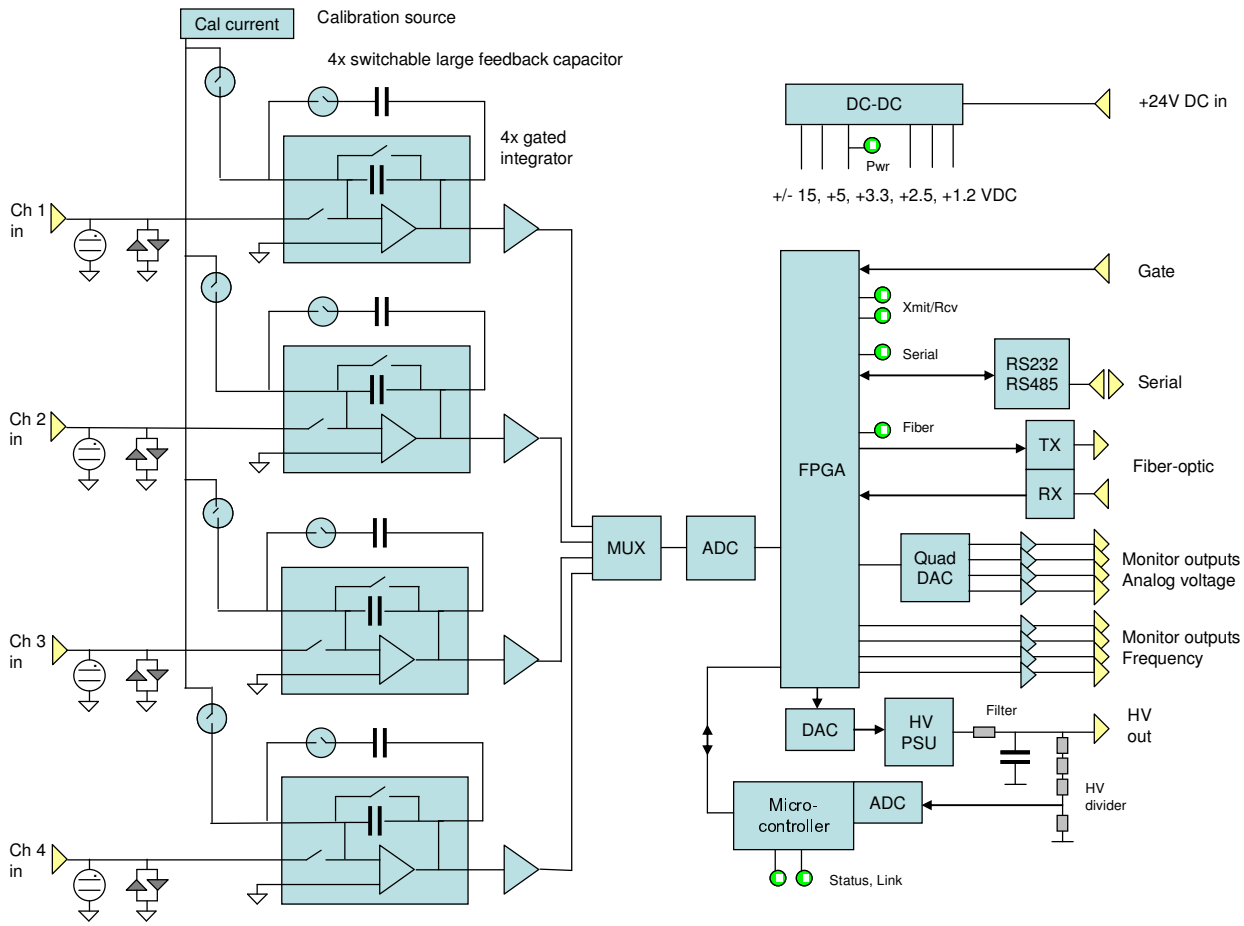

Figure 28. I404 block schematic.

13 Making Current Measurements

13.1 Current Ranges

The I404 powers up measuring on its 8 nA range, which uses an integration period of 100 msec, which suppresses mains interference almost completely. However it is very likely that you will need to use other ranges. The correct selection of current range is important for getting the best data quality. You don't want to run the risk of overranging, and thus loosing data, nor, on the other hand, do you want to measure a very small current on a relatively high current range, where you will have poor resolution.

The I404 full scale current is determined by several factors:

- The size of the feedback capacitor. You can choose one of two capacitors, a nominal 100 pF or a nominal 3300 pF. Other values are available to special order.
- The integration period. You can adjust this from 100 usec to 65 seconds.
- The span of the ADC. This is fixed at +/- 10 V.
- The level at which the I404 flags an overrange condition. This is fixed at 98% of the ADC span in either direction.
- The settle and setup times. Although you are not using any data from the integrator ramp during the settle and setup times, the ADC span is nevertheless being consumed.

If you are working in expert mode, and want to predict roughly what a full scale will be for a given selection of integration period and feedback capacitor, then the approximate full scale is given by

$$i_{\max} = \frac{9.8C_{fb}}{t_{per}}$$

where C_{fb} is the selected feedback capacitor and t_{per} is the integration period. The range calculated by the I404 uses a more complete expression which takes account of worst-case capacitor tolerances and settle time. You can do a similar calculation by using the following capacitor values in your calculation, and adding the settle and setup time to the integration period.

Selected capacitor	*Value used for range calculation*
100 pF	80 pF
3300 pF	3050 pF

When the I404 is choosing capacitor and integration period for a selected full scale range, it first selects the capacitor, using 100 pF for currents of 1 µA and less, and 3300 pF for higher currents. Optimized reset, settle and setup times are used based on the capacitor and averaging selection. Finally the I404 calculates the integration period using the effective capacitor values given above.

Because the I404 calculates range using conservative values, you will often be able to measure currents higher than the nominal full scale. However note that the monitors give their maximum

defined outputs (10 V or 1 MHz) at the defined full scale, and will not respond linearly above that.

13.2 Averaging

The I404 gives you great flexibility in the tradeoff between speed of measurement, and resolution and signal to noise ratio. You can choose the number of integrations that are averaged to give one reading, from 1 to 16. You can also choose the number of ADC reading pairs that are made in each integration, also from 1 to 16. The resulting effective resolution in bits is given by:

$$\text{Resolution} = 16 + \text{int}(\log_2(\text{Integration_Avg})) + \text{int}(\log_2(\text{Read_Avg}))$$

Although you can directly select the numbers of each averaging method, it is most convenient to simply select the number of resolution bits, then let the I404 select the number of averages. It will also make the necessary adjustments to the integrator reset timing. If you do wish to make your own direct selections of integration averages and read averages, then you must be aware of the following constraints (all values in µsec):

$$\text{Integration_Period} > \text{Read_Avg} * 16$$

$$\text{Setup} > (\text{Read_Avg} - 1) * 4$$

$$\text{Setup} + \text{Reset} > \text{Read_Avg} * 16$$

$$\log_2(\text{Integration_Avg}) + \log_2(\text{Read_Avg}) <= 4$$

The I404 will adjust the reset and setup times as needed to accommodate your settings, and you can read the values it has used from the screen (or query them if you are using the ASCII protocol).

The rate at which new readings on all four channels are generated is given by

$$t_{data} = (\text{Integration_Period} + \text{Reset} + \text{Settle} + \text{Setup})$$

The exception to this is when you have selected Integration_Avg greater than 1. Then you must wait Integration_Avg * t_{data} for the first reading, to allow the average to be formed. After that the current readings come at the normal rate, because the averaging is done on a rolling basis (the oldest value is removed and replaced with the latest value).

13.3 Triggering

When you initiate a measurement the I404 prepares to make the reading with the selected setup parameters. However the integration cycle does not start until a trigger is seen. There are two trigger modes.

Internal	The start trigger is generated internally by the I404 once the "initiate" message is received, so the predefined acquisition

	sequence runs at once. This is like the autorun feature on an oscilloscope.
External Start	A rising (falling) edge on the gate input starts the predefined acquisition sequence.

The external mode requires a physical signal via the gate input BNC. The gate input requires a TTL level, and presents a TTL gate impedance. To avoid spurious signals due to noise, we recommend that you fit a 50 ohm terminator to this input if you are not using it. If your trigger source is able to drive a 50 ohm load, we also recommend this termination if you are using the input.

13.4 Calibration

The I404 contains a high precision, high stability 500 nA true current source, which is used for the self calibration sequence. It is switched to each of the channels in turn in an automated sequence when you request a calibration. The gain numbers that result reflect the factor by which the feedback capacitors differ from their nominal values. The gain factors are stored in EEPROM in the I404 microcontroller upon request, and are then used to convert the ADC readings into charge in coulombs. Current in amps follows directly because time difference between the start and end ADC readings is known exactly.

If there is no stored calibration, you will still get data back, but default factors of 1.000 will be used, so the accuracy of the results is limited.

When you do a calibration, it is important that no spurious signal current or excess noise is present at the I404 inputs. The simplest way to ensure this is to disconnect any signal leads before doing the calibration.

If you want to check your calibration accuracy, you should use an independent current source. If you simply measure the internal current source, the same source that is used to do the calibration, you will of course see the expected 500 nA even if the calibration is incorrect.

Note that there is no offset parameter in the calibrations. The integration method of the I404, with its start and end ADC readings, ensures that any internal offsets are removed. Any other offsets are due to real currents at the signal inputs, which may be of interest, so we do not hide them. However it is a simple matter to zero any such offsets in the host software, if you are confident that they are stable. The PSI Diagnostic software provides a zero function like this.

13.5 Monitor outputs

13.5.1 Current monitoring

The I404 puts out signals on the monitor outputs that represent the inputs, or a function of the inputs. The monitor signals are provided as analog voltages, and as a frequency, and both types are available simultaneously. The frequency output takes the form of a TTL (0 to 5 V) square wave with 50% duty cycle. The monitors allow the unit to be integrated into existing systems

where ADC cards or counter cards are already available. If you use these outputs exclusively for taking data, then the communications interface is only needed for setting up the device.

By default, the four analog monitors put out an analog voltage that maps the full scale bipolar current range that is being used. Similarly the frequency monitors put out a frequency that maps the same full scale. Since we can't generate a negative frequency, the I404 offers two options for mapping the signal current range onto the frequency range, as illustrate in figure 29. Normal mode maps the full scale current range onto the 0 to 1 MHz frequency range, so that the frequency will be 500 kHz for zero current. Absolute mode puts out 0 Hz at zero current, and maps increasing absolute current to frequencies up to 1 MHz. Clearly you must be able to resolve the two-valued response by other means in this case.

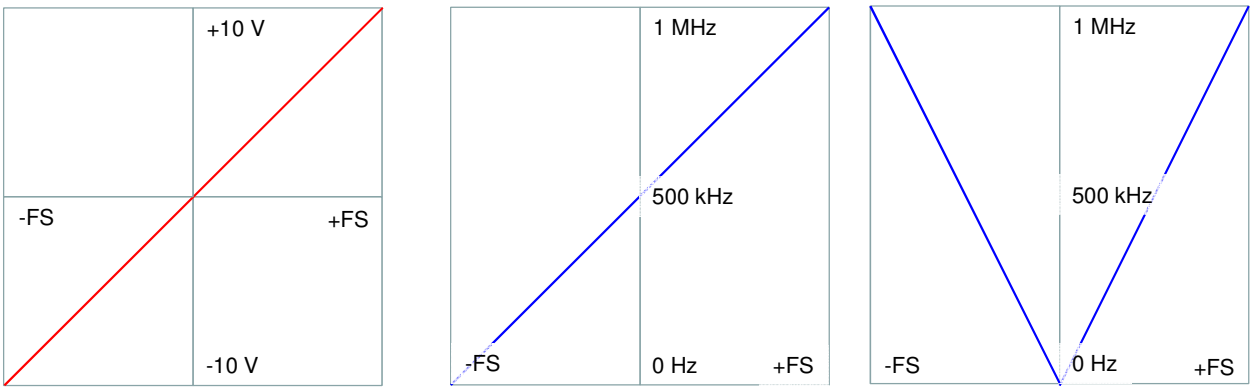

Figure 29. Monitor output mapping - current signals. Analog voltage on the left, Normal and Absolute frequency mappings on the right.

In firmware releases prior to 4.1O, Normal mode was called Bipolar mode, and there were Positive and Negative modes which mapped only positive or negative currents onto the output frequency range. It is still possible to emulate these legacy modes using the compensation parameters.

You have considerable flexibility to change the monitor mappings of measured current using the sensor gain and offset compensation parameters (see section 14). This allows you to compensate for differences between sensors, for example. The factors only affect the monitor outputs if you select this to happen (for example by checking the relevant box in the PSI Diagnostic program ☑ Map Compensated Values to Freq/Analog), otherwise they only affect the values that feed into the position calculations.

If you choose to let the compensation factors affect the monitor outputs, then the analog voltage, V, normal mode frequency, F_N, and absolute mode frequency, F_A, are given by:

$$V = 10.G\frac{(I_{meas} + O)}{FS}$$

$$F_N = 5e5.\left(G.\frac{(I_{meas} + O)}{FS} + 1\right)$$

$$F_N = 1e6.G.ABS\left(\frac{(I_{meas} + O)}{FS}\right)$$

I_{meas} is the measured (uncompensated) current, G and O are the compensation gain and offset, FS is the full scale current and ABS is the absolute value function. The responses in figure 30 illustrate this, for an example with gain of 0.5 and an offset of +20% of full scale.

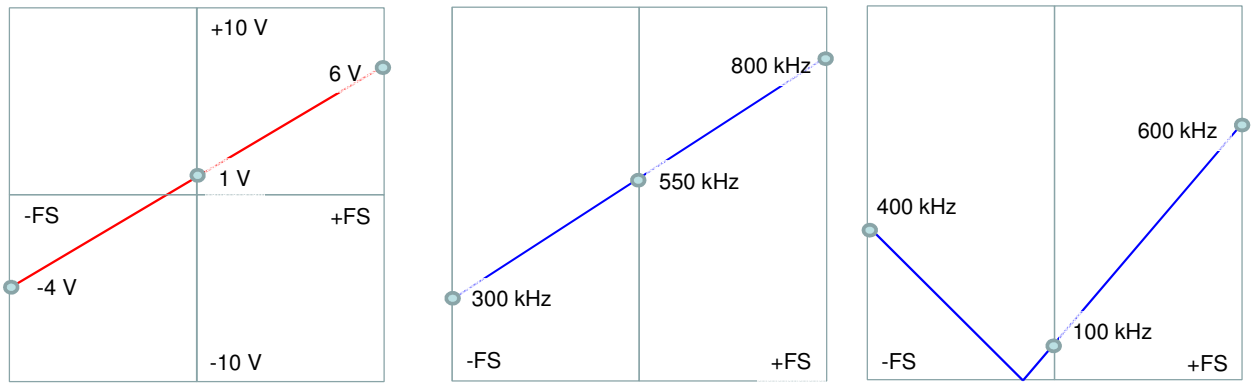

Figure 30. Example of the effect of sensor compensation factors. Analog voltage on the left, Normal and Absolute frequency mappings on the right.

13.5.2 Position monitoring

The monitor outputs are generated in real time by the FPGA in the I404, and this FPGA is able to do very fast calculations on the incoming data. This gives us flexibility to map other data onto the monitors. As standard, the I404 can be switched to output X and Y position functions calculated from the input currents. These are output to A and B monitor outputs, with C and D not used. See section 14 for more details of the position functions. The functions always return values in the range -1 to +1, and are mapped onto the monitors as shown below:

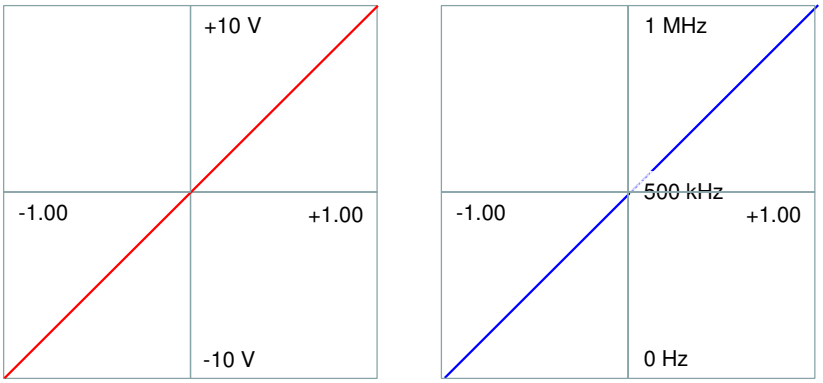

Figure 31. Monitor output mapping - position functions.

14 Beam position readout

A common application for the I404 is readout of beam position monitors (BPMs). These can take the form of dual sensors for one-axis position readout (the axes may or may not be orthogonal), or quadrant sensors for simultaneous two-axis readout at a single plane transverse to the beam direction. The sensors may intercept the beam directly, for example blades that emit electrons when struck by a high energy photon beam, or the interaction may be indirect, for example electrodes in an ionization chamber, or the readouts of photodiodes.

14.1 How compensation factors are used

The I404 is designed to measure current or charge accurately, and report the values it sees. However, the response of the sensors may not be completely uniform, and they may have offset currents, and as a result the position readback is not zero when the beam is centered. This is particularly the case for photodiodes. To handle this, the I404 allows the user to define gain and offset compensation values.

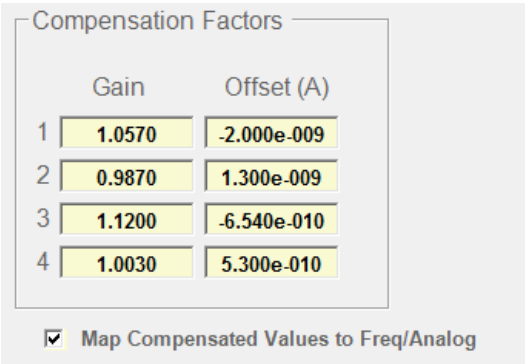

Figure 32. Sensor compensation value fields as shown in the PSI Diagnostic.

With no illumination of the sensor, you can observe any offset currents, and enter these directly as offsets in amps. The value you enter, O, is added to the measured current, so you should enter the negative of the offset you observe.

Deciding how to set the gain compensation factors, G, will depend upon the nature of your system. If the sensors are photodiodes, the simplest method can be to provide a uniform illumination, and note the resulting currents. Then calculate the compensation factors that would be necessary to make the values A,B,C and D equal. One of the factors can remain as 1.00, of course. Alternatively, if you have a beam that you know is at exactly X=Y=0, then you can tune the relevant compensation factors so that the readout is also X=Y=0.

The values A, B, C, D used in the difference over sum position algorithms by the I404 are therefore

$$A = G_A*(I_A + O_A)$$

$$B = G_B*(I_B+ O_A)$$

$$C = G_C*(I_C+ O_A)$$

$$D = G_D*(I_D+ O_A)$$

where $I_{A,B,C,D}$ are the signals from inputs labeled A through D, and $G_{A,B,C,D}$, $O_{A,B,C,D}$ are the corresponding compensation factors.

Do not confuse these sensor compensation factors with the gain factors that are generated by the I404's automatic calibration routine to convert raw data to accurate currents in amps, nor with the gain and offset factors that are used in the PSI Diagnostic to convert position algorithm output to physical positions. Figure 33 illustrates the overall flow of data in the I404:

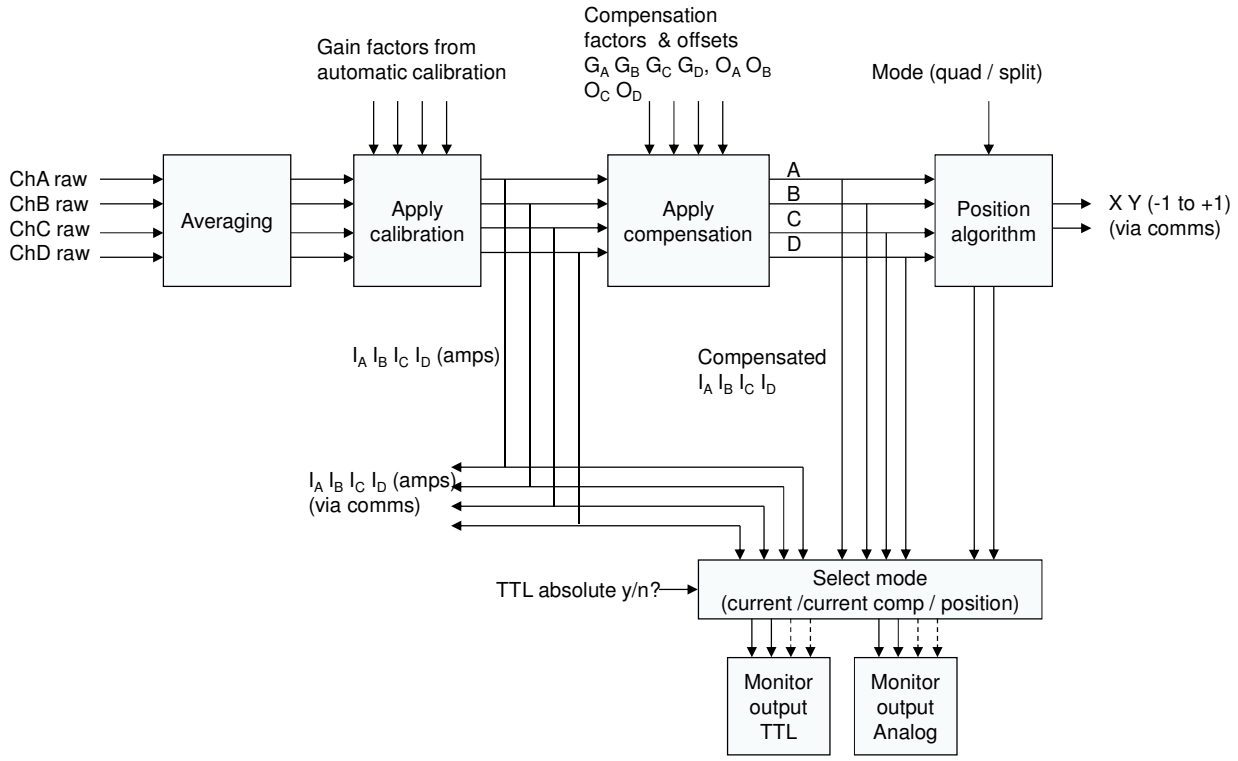

Figure 33. Dataflow in the I404

The two left hand blocks of figure 33 represent the process in which raw ADC values are turned into accurate currents in amps by the process of averaging and application of the calibration gain factors. These currents are what you get back from the I404 via the communications link, irrespective of how you set the compensation factors. So when you change the compensation factors, expect the position readback to change, but not the currents. However the values A,B,C,D, the inputs to the position algorithm, can be optionally directed to the monitor outputs. The output of the position algorithm is available over the communications channel, and from two of the monitor outputs

14.2 Position algorithms

Now we have the compensation-corrected values A,B,C,D, then the I404 can calculate the position responses and send the results over the communications interface and to the monitor outputs. The two available position calculations are as shown in the following figures.

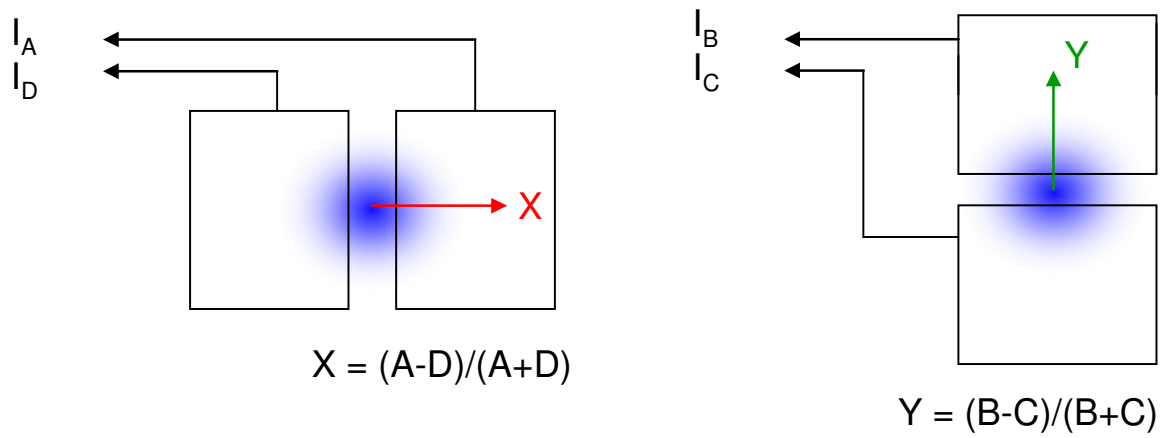

Figure 34. Single axis readout from a pair of split sensors

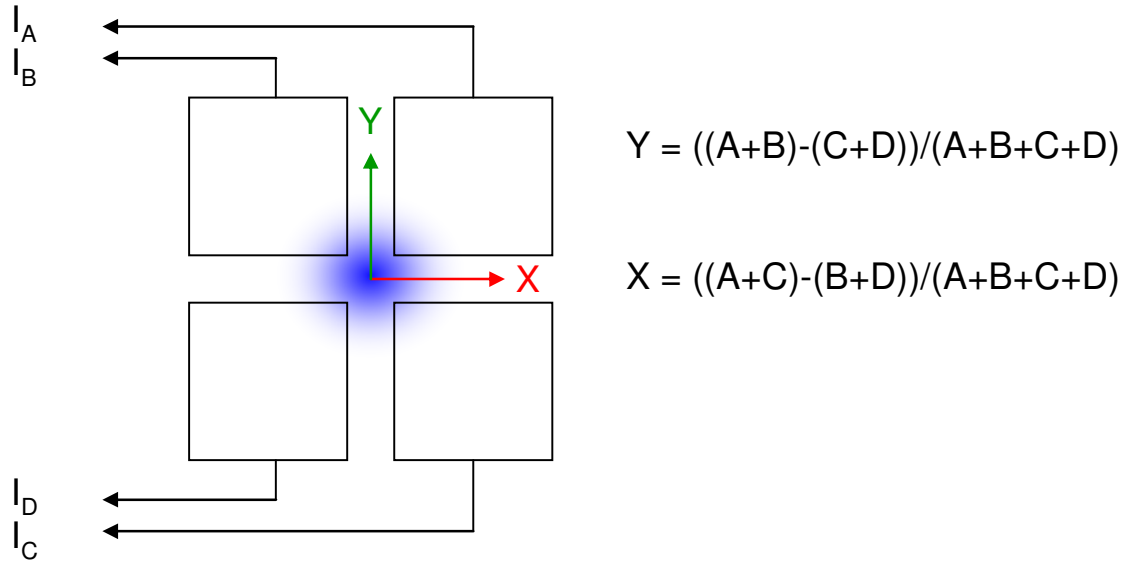

Figure 35. Two axis readout from a quadrant sensor

The position algorithms shown in figures 34 and 35 are implemented in the I404, and the results can be read over the communications interface, or mapped onto the monitor outputs. The algorithm that is implemented depends upon your selection of the monitor output on the Setup tab, as follows:

Monitor output selection	*Algorithm*
Current	Quadrant
Quadrant	Quadrant
Split	Split

In order to convert to physical units such as mm, you can multiply the result by a gain factor and add any zero offset in the host software:

$$X\ (mm) = G_X * X + X_{OFF}$$

$$Y\ (mm) = G_Y * Y + Y_{OFF}$$

where $G_{X,Y}$ are the conversion gain factors in mm per position unit and $Y_{OFF,}$ Y_{OFF} are the absolute position of the center of the position sensor in mm. The PSI Diagnostic software implements conversion to mm using conversion gain factors and offsets that you enter.

The position algorithms assume that all four signals have the same polarity, and that the values are not too small. If your signals are negative rather than positive, you can tell the I404 so that the position still gets correctly calculated. You can also define a percentage of full scale below which the current reading will be replaced with zero in the calculation. This can prevent a noisy position value when the signals are very small. If the denominator in the calculations ever becomes zero, then a position of 0.0 is returned.

14.3 Considerations when using split or quadrant sensors

Provided that the beam dimensions are not too small or large relative to the sensor dimensions, then the position functions will be linear with actual beam position over a reasonable range. Figure 36 shows an example position response curve for a Gaussian current distribution moving across a split sensor system. The physical width over which there is an approximately linear response depends upon the width of the current distribution. If it is too broad, however, the gradient will be small and the position function becomes noise-prone, particularly if the gap between the sensors is large.

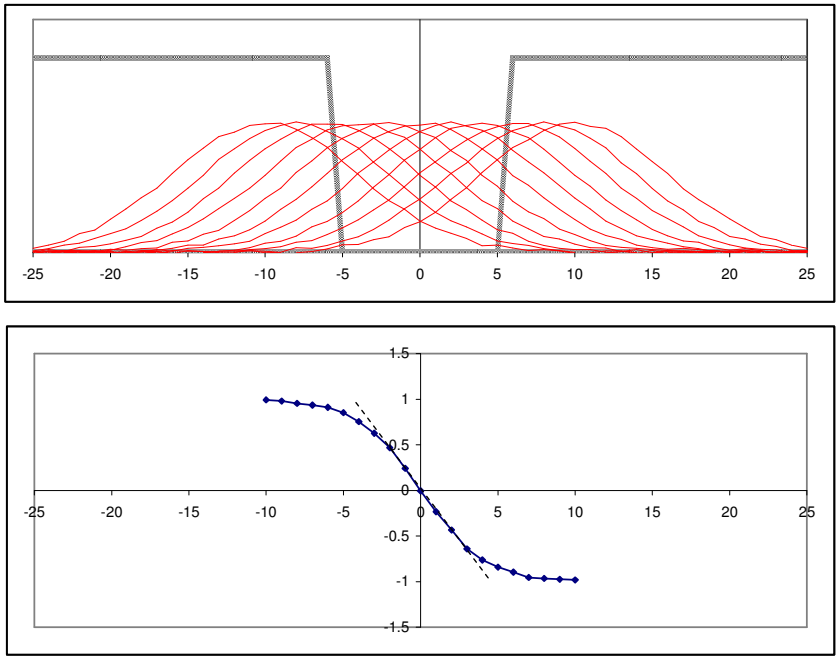

Figure 36. Position response from a split sensor.

Normally you work only in the linear region. The slope of the linear region is the conversion gain factor $G_{X,Y}$ mentioned above. The working range can be increased if you can measure a calibration curve, and fit a higher-order polynomial. However the noise problem of low gradient once more applies, and there is risk of placing undue faith in the quality of the result as you move towards the positive and negative limits of the response curve.

14.4 Position readout screens in the PSI Diagnostic

The PSI Diagnostic software provides special screens to display position values generated by the device. Note that the way you display the X,Y positions is a separate consideration from the position algorithm that is used. You should always use the algorithm that is most appropriate to your sensor configuration. The selected mode is shown at the lower left corner of the I404 Data tab.

14.4.1 Position sub-tab

The position tab simply displays the calculated X and Y positions instead of currents. The controls are otherwise the same as the current tab. Low-pass filtering works on the position readings, but zero does not. Changing the X/Y gain or X/Y offset

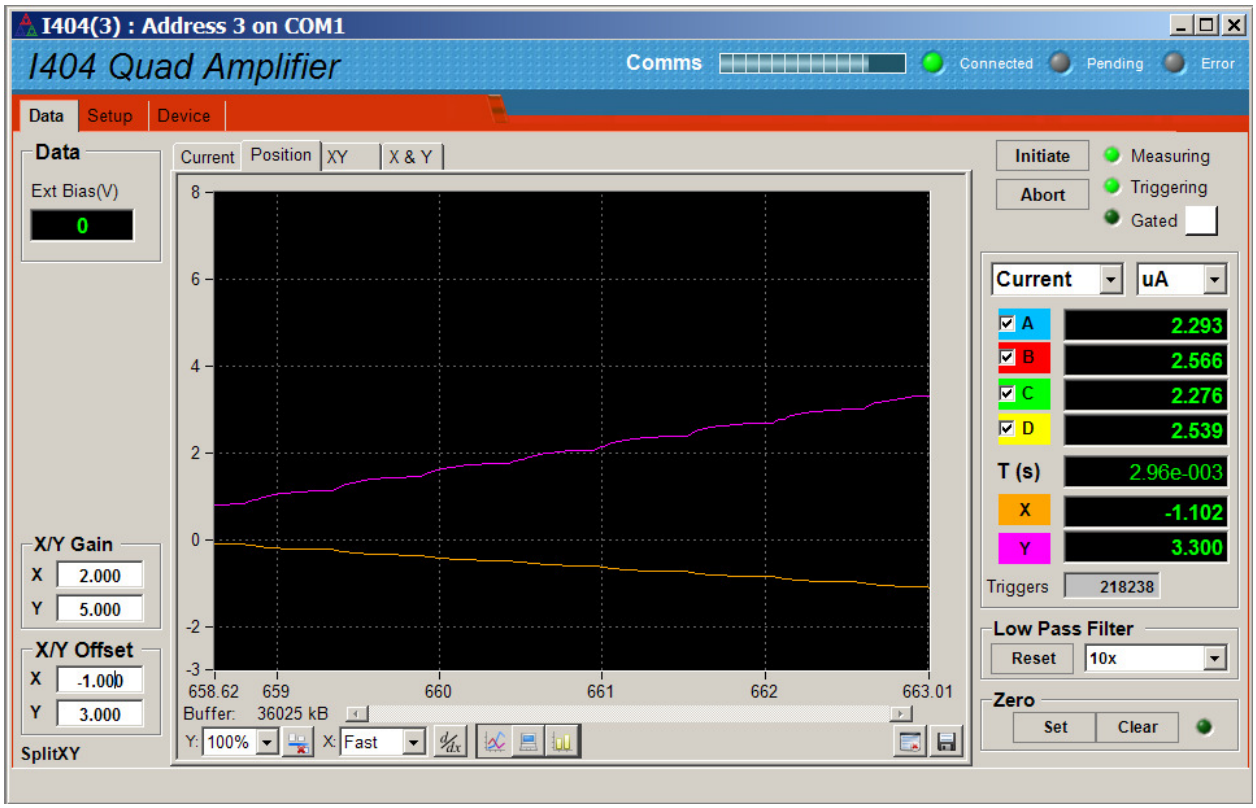

Figure 37. Position data sub-tab

Note that setting the graph to display positive values only may not be appropriate for position signals, which are typically bipolar even though the measured currents are all unipolar.

14.4.2 XY sub-tab

The XY screen plots X against Y as a moving crosshair. The readings shown on the graphic are the current readings multiplied by the compensation factors that you have entered on the Setup tab.

If you have set quadrant calculation mode, then the channel indicators and readings are arranged around the graphic in the pattern that is assumed by that calculation.

If you have selected split mode, then this graphic may not be physically meaningful, depending on the actual arrangement of your sensors. The channel indicators and readings are moved on the graphic to indicate that the quadrant layout may not apply.

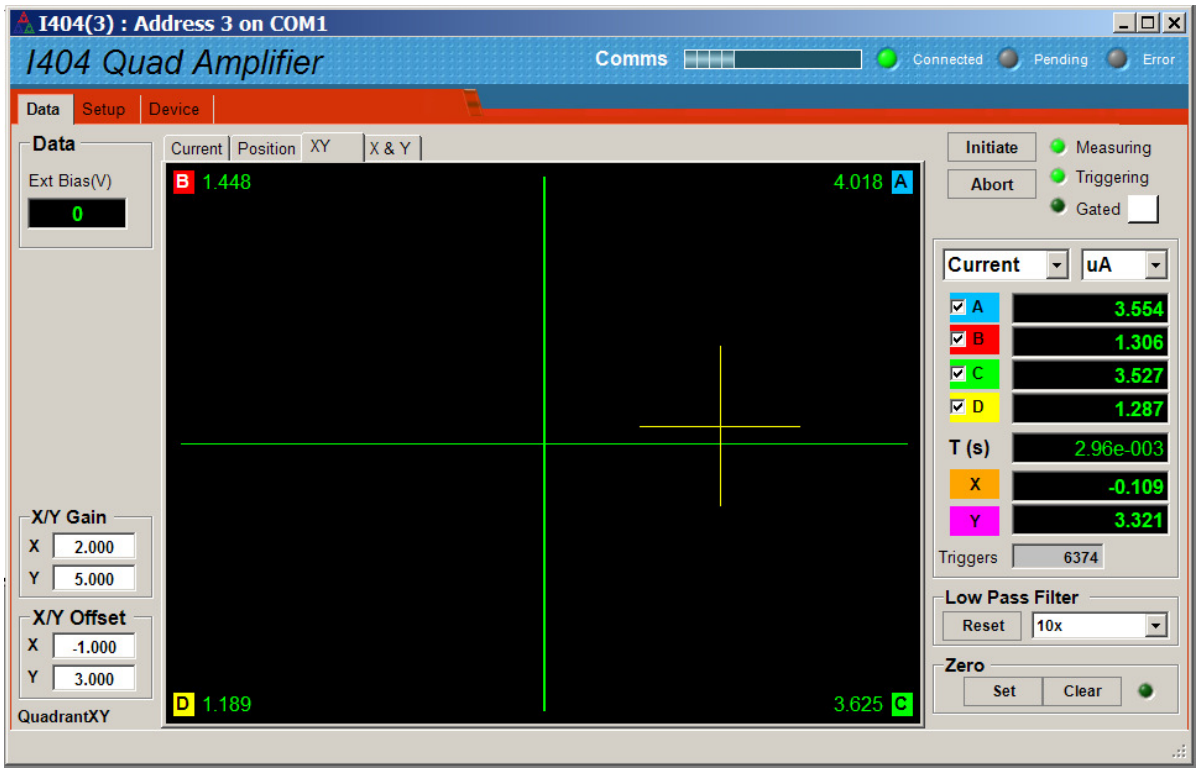

Figure 38. XY data sub-tab for quadrant calculation mode

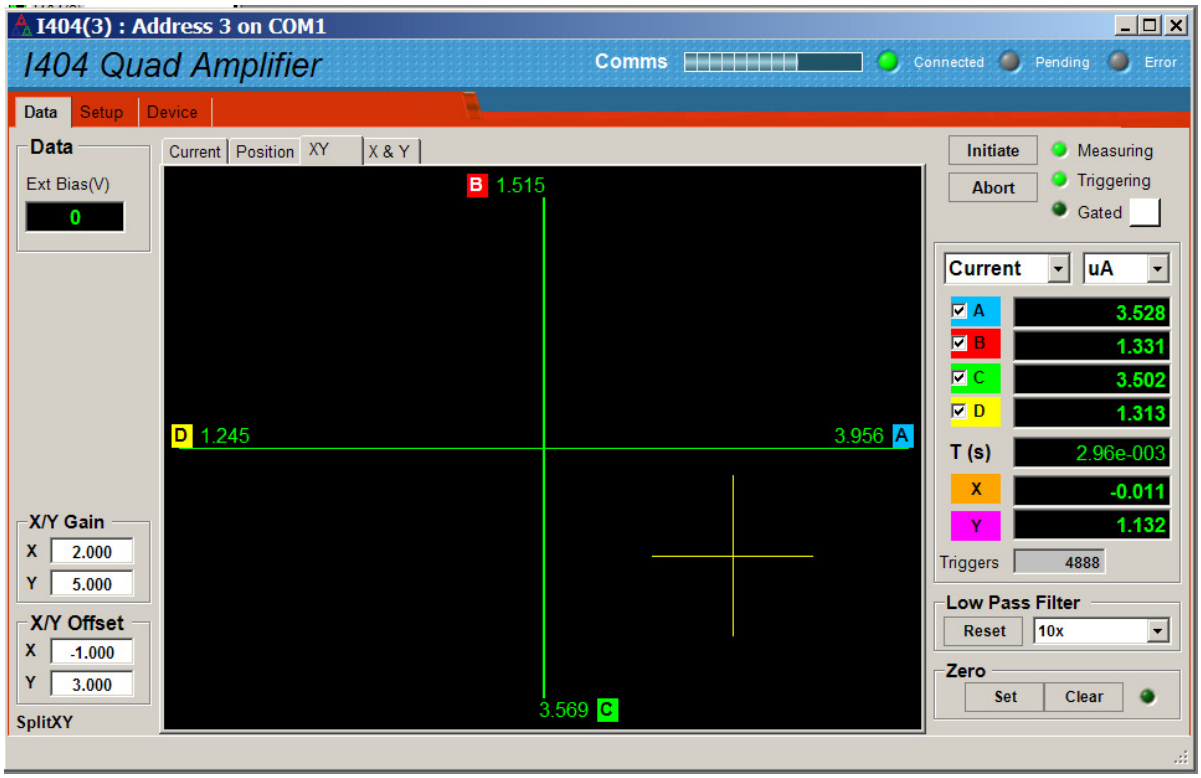

Figure 39. XY position data sub-tab for split calculation mode

14.4.3 X & Y sub-tab

The X & Y screen presents the positions as two independent markers that move along the span of the position range. This display would be most appropriate if you have two independent sensor pairs, each pair encoding an individual axis. There is no requirement that the sensing axes be orthogonal, or coupled.

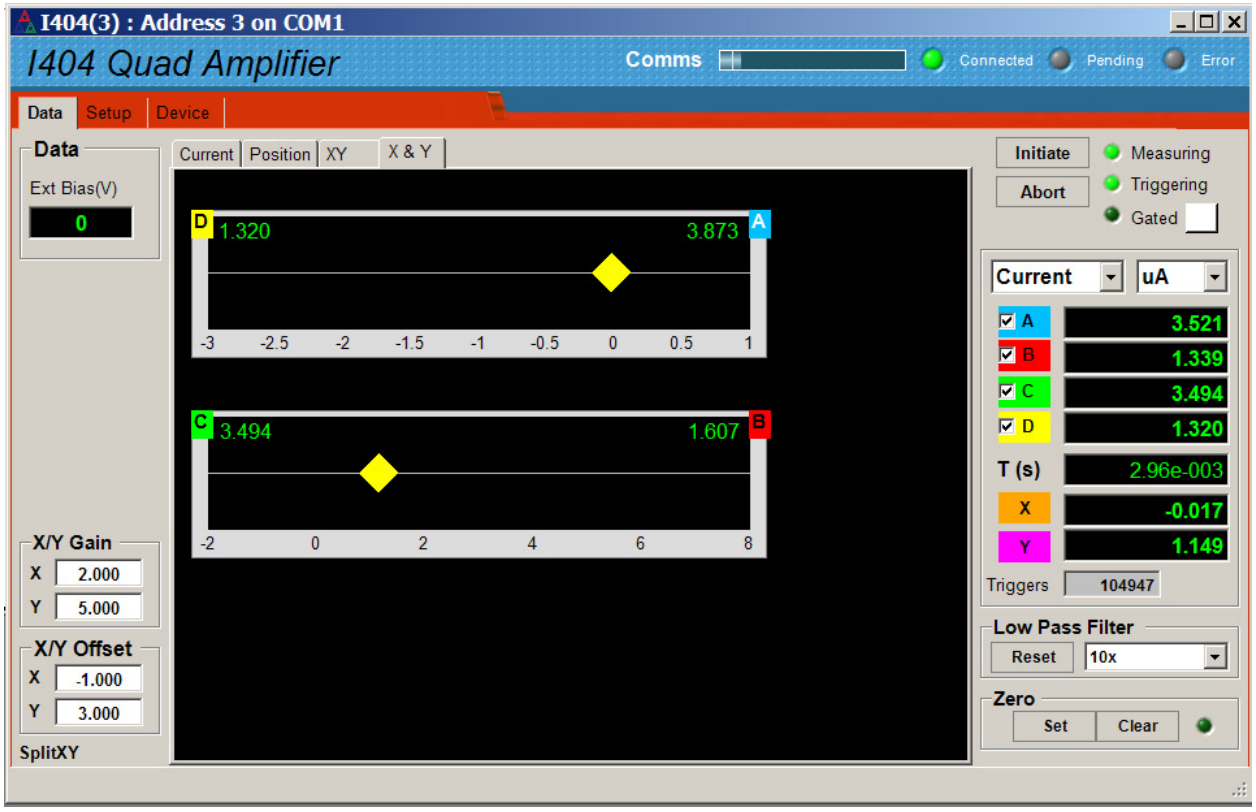

Figure 40. X & Y position data sub-tab

15 High Voltage Option

The range and polarity of the high voltage supplies is fixed and must be specified at time of purchase. Units may be returned to the factory to alter the high voltage modules if necessary. The supplies have a maximum power rating at full voltage output of 1 watt. Higher voltage supply options can therefore deliver less current than the lower voltage options. The maximum current compliance in amps is given by 1/V where V is the rated output in volts.

Note that the supplies are not designed to operate at a small fraction of their full voltage rating. The current compliance reduces at lower settings, and there may be overshoot on starting up if the set value is low. You should specify a supply option with appropriate voltage rating for your application.

The set voltage can be adjusted at any time, independent of what measurements are in progress. Positive supplies source conventional current, and negative supplies sink conventional current. Any valid setpoint apart from zero volts enables the supply. The "HV active" LED illuminates when the supply is enabled.

15.1 High voltage filter

The output of the supply is passed through a low pass passive RC filter, configured according to the HV rating. This reduces the level residual ripple from the high voltage power supply. This is most important for the 3 kV HV option, where the basic ripple specification of the HV supply is lower.

Note that there is some voltage drop across the filter if current is drawn from the supply, so that the actual voltage will differ slightly from the set voltage. You will see this on the readback, which measures after the filter. The full load voltage drops for the various HV options are as follows:

HV option	*3kV*	*2kV*	*1kV*	*500V*	*200V*
Filter resistor	32.2 kohm	32.2 kohm	10 kohm	4.7 kohm	0 ohm
Max voltage drop	11 V	17 V	5 V	9 V	0 V

The difference will be of no significance for most applications, and it unlikely that full load current will be drawn in typical applications.

15.2 High voltage readback

High voltage is read directly from the I404 output using a voltage divider and ADC. The divider has an impedance of 60 Mohm to ground. This is always present as a small load on the supply.

The readback provides a useful diagnostic if the high voltage is being shorted or overloaded. If you notice that the readback is significantly lower than the setpoint, then this indicates excessive current drain, due to a low impedance to ground. Shut down and investigate. Similarly if you notice that the readback is significantly higher than the setpoint, this indicates that an external

voltage source is driving the I404 HV output. This may damage the supply, and you should shut down and investigate.

15.3 High voltage protection features

The I404 processor will automatically shut down the supply to avoid overcurrent damage if the feedback differs from the setpoint by (20% of setpoint + 5% of full scale voltage) for more than fifteen seconds.

The supply is limited by a software high voltage limit, which is password protected and stored in EEPROM in the I404. The I404 will reject any attempts to set the voltage higher than the limit. This allows sensitive detector systems, or experiments which may be damaged by excessive voltage, to be protected. Note that there is an overshoot when the HV supply starts up to low settings.

CAUTION
Do not use the I404 HV supply if your application requires a small fraction of its full voltage rating, and could be damaged by a short-term overvoltage.

CAUTION
Do not connect external power supplies to the I404 high voltage output that will drive the built-in supply away from the voltage it is trying to regulate, or you may cause damage to the I404.

CAUTION
Do not connect the I404 high voltage output to electrodes in a system that will be subject to direct strike by high energy, high current charged particle beams that will drive the built-in supplies above the voltages they are trying to regulate, or you may cause damage to the I404.

CAUTION
BNC connectors are only rated up to 500 VDC. They are not suitable for high voltage, and should not be used for this purpose. The I404 is fitted with an SHV connector which is rated for the maximum voltage. You should use the appropriate corresponding cable.

16 Connectors

16.1 Front panel connectors

16.1.1 Signal inputs

Four BNC female (socket). To mate with standard signal BNC plug.

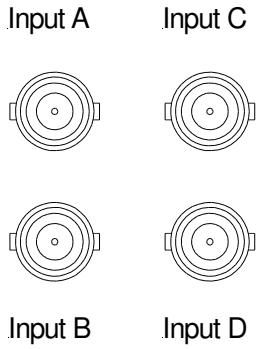

On the PSI Diagnostic host program, inputs A, B, C, D are labelled as channels 1, 2, 3, 4.

16.1.2 Analog monitor outputs

Four Lemo 00 coaxial female (socket). Signal on center pin, +/- 10 VDC.

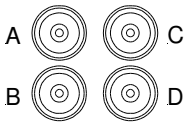

16.1.3 Frequency monitor outputs

Four Lemo 00 coaxial (socket). Signal on center pin, TTL levels.

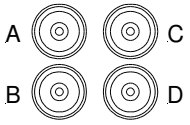

16.1.4 Gate input

BNC socket (female). To mate with standard signal BNC. Input signal on center pin, TTL levels.

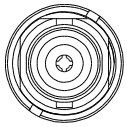

16.1.5 Auxiliary HV out

SHV male. To mate with standard SHV connector such as Radiall R317 005. High voltage on center pin, +/- 3000 VDC maximum.

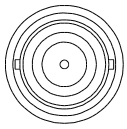

16.1.6 Ground lug

M3 threaded stud. To mate with M3 ring lug.

16.2 Rear panel connectors

16.2.1 Power input

2.1 mm threaded jack. To mate with Switchcraft S761K or equivalent

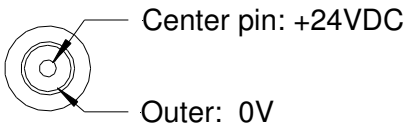

16.2.2 RS-232 and RS-485 communications

Six pin mini-DIN socket (PS/2 mouse/keyboard type).

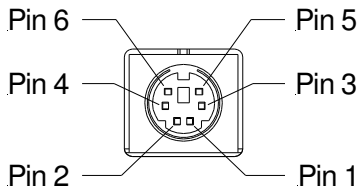

(External view on connector / solder side of mating plug)

1	RS-232 Tx / RS-485 Tx-	4	n/c
2	RS-232 Rx / RS-485 Rx+	5	RS-485 Tx+
3	Gnd	6	RS-485 Rx-

The socket incorporates a sensor switch that allows the I404 to detect that a plug has been connected. When a connection is made, the RS-232 / RS-485 transceiver is active, and the communication mode is set by the mode switch. When there is no connection, the fiber-optic channel is active.

16.2.3 Fiber-optic communications

ST bayonet. To mate with ST male terminated fiber optic cable.

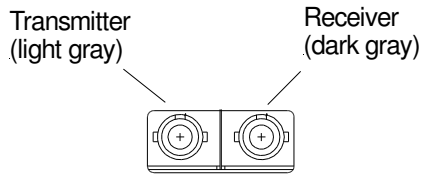

Take appropriate care when making ST connectors. Do not apply excessive force or you may damage the connector. Most ST plugs have a key (or lug) on the central body. This must align with the keyway on the top of the socket on the I404 before the plug can be pushed home. The outer shell of the plug can then be rotated while pushing against the spring pressure to engage the bayonet.

17 Controls and Indicators

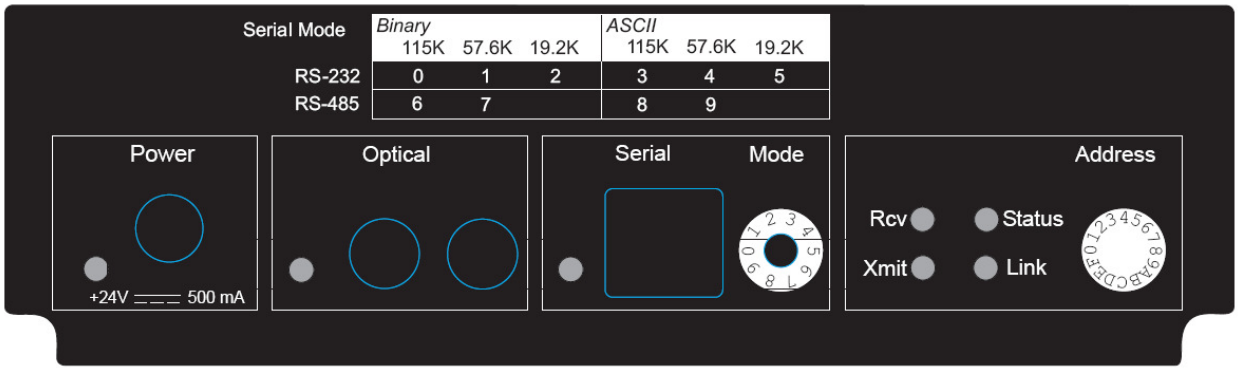

Figure 41 Rear panel showing controls and indicators

17.1 Front panel controls

None.

17.2 Rear panel controls

17.2.1 Mode switch

This 10 position rotary switch sets the communications mode when a connection is made to the serial port. It is ignored if there is no connection, and the I404 defaults to 10 Mb/s binary communication on the fiber optic port. Binary protocols are used by the Pyramid Technical Consultants, Inc. Diagnostic and other suitable host systems. The ASCII protocol is provided for ease of connection to existing systems and simple terminal programs.

Setting	Function
0	8 bit binary, 115 kbps, RS-232
1	8 bit binary, 57.6 kbps, RS-232
2	8 bit binary, 19.2 kbps, RS-232
3	ASCII, 115.2 kbps , RS-232
4	ASCII, 57.6 kbps , RS-232
5	ASCII, 19.2 kbps, RS-232
6	8 bit binary, 115 kbps, RS-485
7	8 bit binary, 57.6 kbps, RS-485
8	ASCII, 115.2 kbps , RS-485
9	ASCII, 57.6 kbps , RS-485

17.2.2 Address switch

This 16 position rotary switch sets the device address. Choice of address is arbitrary, but each device in a fiber-optic loop system must have a unique address.

Setting	Function
0	(Reserved to loop controller)
1-15	Available address settings.

17.3 Front panel indicators

17.3.1 HV active

Orange LED. The optional HV supply is enabled.

17.4 Rear panel indicators

17.4.1 Power

Green LED. +24VDC power is present, 5V DC-DC converter is running.

17.4.2 Serial

Green LED. The RS-232/RS-485 communication port is active.

17.4.3 Optical

Green LED. Fiber-optic communication port is active.

17.4.4 Rcv

Green LED. Data being received by the unit (two second timeout before the LED goes off).

17.4.5 Xmit

Green LED. Data being transmitted from the unit (two second timeout before the LED goes off).

17.4.6 Status

Red/Green LED. This LED indicates a variety of internal states, as follows:

	Alternating red/orange/green/off	Unit powering up
	Off	Unit idle (not measuring)
	Orange	Waiting for trigger; or resetting integrators
	Green	Measuring
	Red	Error
	Alternating green/orange	Downloading program from host

17.4.7 Link

Red/Green LED. This LED indicates a variety of communication states, as follows:

	Alternating red/orange/green/off	Unit powering up
	Off	No connection since last power-up.
	Alternating green/off	Unconnected after timeout
	Alternating orange/off	Unconnected after timeout; unit has gone to the safe state.
	Green	Connection made to host
	Red	Fatal communications error
	Fast alternating green/orange	Boot state (waiting start command or code download)

18 Internal Jumpers

We do not recommend that users open the I404 case. There are no user-serviceable parts within, and there is the risk of degrading low-current performance by contaminating the circuit board. The following information is provided for reference only.

Jumper bank JPR2 settings for revision 2 hardware, 4.1H device firmware and later. If you have revision 1 hardware, and wish to add the high voltage option, please contact Pyramid Technical Consultants, Inc. for detailed advice.

18.1 High voltage options

Set 2mm jumpers to identify the installed HV module to the device software.

High voltage option	*Jumpers made*
None	No jumpers on +, HV0, HV1, HV2 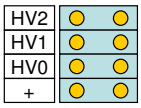
+3000	HV0, HV2 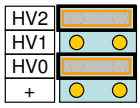
+2000	HV2 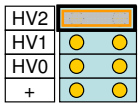
+1000	HV0, HV1 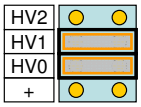
+500	HV1 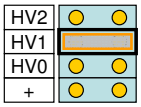
+200	HV0 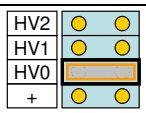
-3000	+, HV0, HV2 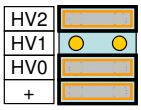
-2000	+, HV2 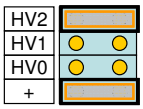
-1000	+, HV0, HV1 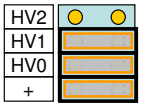
-500	+, HV1 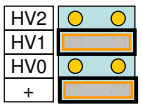

-200	+, HV0	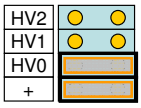

The remaining jumper stations RG1,2 and OP1,2 are reserved for future options.

19 Communications Interfaces

19.1 I404 Interfaces

The I404 is a member of the PSI range of devices. More details of PSI device interfacing options can be found in document Pyramid Technical Consultants document PSI_AN_060505 “Versatile Communications and Control for Scientific and Engineering Applications”.

The unit is provided with three hardware interfaces, RS-232, RS-485 and fiber-optic. The RS-232 interface is intended for simple direct connection to PCs, with no other equipment necessary. The RS-485 interface is used primarily as an RS-232 extender. Because it uses differential lines, you can transmit data reliably over hundreds of meters using the RS-485 interface, rather than a few metres with RS-232. RS-485 is not generally provided on PC motherboards, but RS-232 to RS-485 adaptors are widely available and cost-effective.

The fiber-optic interface provides greater speed, excellent noise immunity, and allows multiple devices to be connected in a looped topology. It requires a fiber-optic adaptor or loop controller device to connect to the host computer. The fiber-optic interface is well-suited to large systems.

Only one interface is in use at any time. Selection of the active interface is according to the cables that are connected and the mode switch setting.

19.2 RS-485 connection example

Figure 42 shows a typical configuration where RS-485 is used to extend a 115 kbps ASCII RS-232 connection over a long distance. An RS-232 to RS-485 converter is used at the host PC end. The built-in RS-485 of the I404 allows a direct connection at its end.

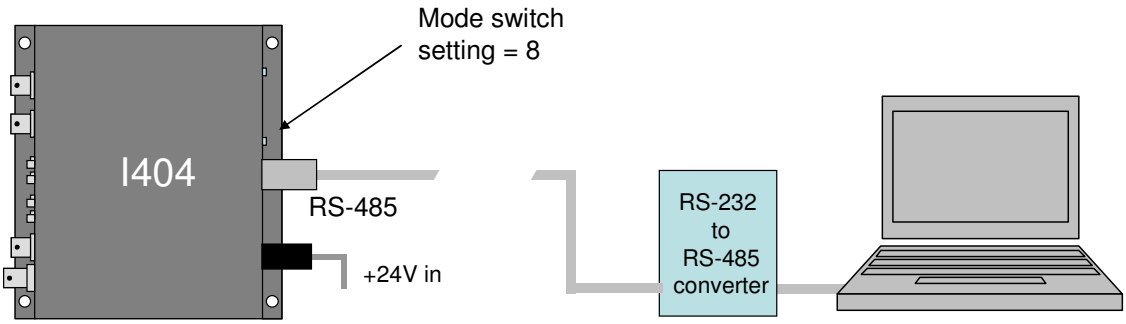

Figure 42. Using RS-485 as an RS-232 extender

A commonly-used converter for the beam position monitor application is the MOXA TC100. The Moxa TCC-80 is a low-cost alternative for less critical applications. The converter should be configured for four wire (full duplex) RS-485 operation. The I404 provides parallel termination for transmit and receive. It is therefore optional whether you also terminate at the TC100 end, but there is no harm if you do. The recommended Dip switch setting for the TC100 is:

Sw1	Sw2	Sw3
OFF	ON	ON

The recommended Dip switch setting for the TCC-80 is:

Sw1	Sw2	Sw3
ON	OFF	ON

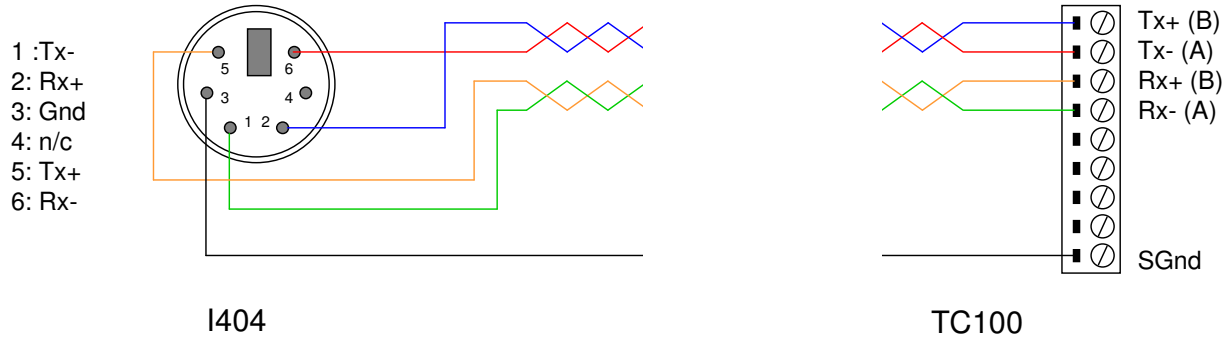

Figure 43. RS-485 cable I404 to TC100.

In order to enable the RS-485 interface on the I404, you must have a physical connection to the serial port, and you must select one of the relevant modes (modes 6 through 9). If you have trouble getting the RS-485 connection to work, check carefully to ensure that you have all the transmit and receive lines connected as shown.

20 Communications protocols

20.1 Overview

The I404 supports three types of communication protocol, selected according to the setting of the mode switch:

a) An eight bit ASCII protocol, messages compliant with SCPI. The low seven bits are used to encode the ASCII character. The eighth bit is only set for synchronization when the <ACK>, <BELL>, <CR>, <LF>, and <ESC> characters are transmitted.

b) An eight bit binary protocol. The first and last bytes of the entire command or reply have the eighth bit set and contain the address. All other bytes in the messages are broken into two bytes, encoded into the low nibble (4 bits), thus never having the top bit set.

c) A nine bit binary protocol. Synchronization is done with the ninth bit. The first and last byte of each message have the ninth bit set and contain the address, and all other bytes are unmodified binary (with the ninth bit clear).

ASCII messaging is provided for users who wish to use existing host software systems that provide convenient support for ASCII communications. An example is EPICS, which can support the I404 via the StreamDevice module. All the capabilities of the I404 are available through a familiar virtual instrument model and message structure. A simple terminal program such as Windows Hyperterminal is sufficient to establish communication with the device. This is no longer supplied as part of Microsoft Windows, but you can use shareware equivalents such as puTTY and Realterm.

The binary messaging is more efficient in its use of communications bandwidth. It is fully deterministic with embedded addressing in the messages and immediate responses, including error reports, from the devices. Pyramid Technical Consultants, Inc. provides software drivers and diagnostic host programs for users who wish to use binary communication protocols. Eight bit binary is primarily intended for direct host to device communication, for example via RS-232 or RS-485 links. Nine bit binary is reserved for the 10 Mbit/s fiber-optic channel, and is highly recommended for larger systems with multiple addressable devices in a loop.

20.2 ASCII Protocol - SCPI

Standard Commands for Programmable Instruments (SCPI) is an extension of the IEEE 488.2 standard. This was originally developed by Hewlett-Packard for the HP-IB (later GP-IB) interface before being adopted by the IEEE, and is widely used by manufacturers of measurement equipment. The I404 implements the 1999.0 revision of SCPI (© 1999 SCPI Consortium).

20.2.1 Messages

The first bit of every eight bit group in a message is the start bit, followed by seven bits encoding a character from the ASCII character set.

A full command from the host to the I404 comprises as many ASCII characters as needed to form the message, terminated by the LF (0x0A; ctrl-J) character. The I404 will not start to process a command until the 0x0A character is received. The list of valid commands is listed in the next section. If the communications is being handled in a terminal session, the terminal program should send CR (0x0d) before the LF to get a legible display. The CR is ignored by the command interpreter in the I404.

The I404 generates a reply to every message from the host when it is the listener. The first byte of its reply will always be a single non-printing character. The first character is ACK (0x06) when the command has been successfully executed with no errors. Responses to host commands with a '?' will then have the required data, terminated with the CR,LF sequence. If the host is not requesting data (no "?"), no other bytes will be transmitted after the ACK. If the I404 generates an error when executing the host command, it will transmit a single BELL (0x07) as its response. A computer running a terminal program will therefore "beep" when the I404 cannot execute a command, for example due to incorrect syntax. A more interactive "terminal mode" can be selected which modifies this behavior to make the I404 more user-friendly when it is being driven from a terminal program.

Device addressing is performed using the special command '#'. Addressing is only necessary for devices linked by a fiber-optic loop, but a device is made the "listener" when the host sends #ADDRESS. For example, #4 will make the device with address 4 the listener. You must ensure that all devices on the same communications channel have unique addresses. All subsequent commands sent (without address) will be listened and responded to by device 4 only. The host message #? asks who the listener is. The # command can be sent as a compound message, such as #3;*IDN?.

20.2.2 Status registers

The I404 implements the IEEE 488.2 status register method. Each of the registers is masked by a corresponding enable register. It is recommended that you set all the enable registers to all 1's. The host software should use the *STB? command to watch for changes to the status of the I404, and then *ESR?, :STATus:OPERation:CONDition? or :STATus:QUESTionable:CONDition? as appropriate to recover the details from the relevant register.

20.2.3 Host Commands

The I404 responds to the mandatory commands prescribed by SCPI and IEEE 488.2, plus specific commands as required by the operation of the device. The commands are grouped with a hierarchical structure, with the levels separated by the colon character. For example:

CONFigure:PERiod 1e-2

This command configures the integration period to have a length of 10 milliseconds.

SCPI provides for a long and short form for each command. The short forms are indicated by the capitalized part of the command. { } denotes a required argument, [ ] denotes an optional argument.

A number of commands are password protected to reduce the chance of changing them accidentally. These commands are only effective after the device has been rebooted if they have been enabled by first sending
SYSTem::PASSword 12345
Sending any other number as the argument of this command disables the protected commands again.

20.2.3.1 ADDRESSING DEVICES

SCPI does not provide specific commands for addressing multiple devices, because this was handled by hardware in the original IEEE 488.1 specification. The I404 provides a simple mechanism for making any device on the loop the listener. The device will remain the listener until another device is selected.

{address} // Make device address (1 to 15) the listener

#? // Query which device is listener.

20.2.3.2 IEEE 488.2 MANDATORY COMMANDS

Commands which have a query equivalent for readback are marked with “(?)” in the following tables. Parameters are generally passed to the I404 with the set version of the command, but no parameters are passed for the query version. For example,

*ESE 3 // set the Event Status Enable register to 0000011

*ESE? // query the Event Status Enable register

*CLS		Clear Status Command. Clear all event registers and the error queue
*ESE	(?)	Program (query) the state of the Event Status Enable register. 8 bits. I404 returns decimal value.
*ESR?		Standard Event Status Register Query. Query the state of the Event Status register. I404 returns decimal value.
*IDN?		Identification Query. I404 returns manufacturer, model number, serial number, firmware version
*OPC	(?)	Set (query) the Operation Complete bit in the Standard Event Status Register after all pending commands have been executed. Not currently supported.
*RST		Reset Command. Return the device to the *RST default conditions.
*SRE	(?)	Program (query) the Service Request Enable register. Not currently supported.
*STB?		Read Status Byte Query. Query the Status Byte Register. I404 returns decimal value.
*TST?		Self-Test Query. Perform a checksum test on ROM and return the result. I404 returns <1>.
*WAI		Wait-to-Continue Command. Wait until all previous commands are executed. Not currently supported.

20.2.3.3 IEEE 488.2 OPTIONAL COMMANDS

*RCL					Recall instrument state from EEPROM
*SAV					Save present instrument state to EEPROM

The settings covered by *RCL and *SAV are:

CONFig:CAPacitor
CONFig:PERiod
CONFig:POLarity
TRIGger:SOURce

Note that the high voltage settings (CONFigure:HIVOltage) are NOT included.

20.2.3.4 I404 COMMANDS

ABORt				Abort measurement
CALIBration	:COMPensation	:ENABLE {0|1}	(?)	Send (query) bit to enable use of sensor compensation factors for values sent to monitor outputs. Note: prior to device firmware release 4.1O, only gain factors were supported, with CALIB:COMP {<float32>,<float32>,<float32>,<float32>}
		:GAIN {<float32>,<float32>,<float32>,<float32>}	(?)	Send (query) sensor compensation gain factors.
		:OFFset {<float32>,<float32>,<float32>,<float32>}	(?)	Send (query) sensor compensation offsets in amps.
	:GAIn		(?)	Calibrate (query) current measurement calibration gain for each channel, or reset stored gains to nominal
	:RCL			Recalls the stored calibration and compensation factors
	:SAV			Saves the active calibration and compensation factors to EEPROM
	:SOURce {0|1|2|3|4}		(?)	Set (query) internal calibration source state, 0 = off (OFF) 1-4 = on, directed to designated channel
CONFigure	:CAPacitor {0|1}		(?)	Set (query) feedback capacitor 0 = small capacitor (100 pF by default) 1 = large capacitor (3300 pF by default)
	:FREQuency {0|1|3}		(?)	Set (query) the mapping of the frequency monitor outputs when they are showing current. 0 = The absolute value of the selected signal is mapped to the frequency monitor output 1 Positive values only are mapped 2 = Negative values only are mapped
	:HIVOltage	:MAXvalue {<int16>}	(?)	Set (query) maximum allowable external high voltage

				setting in volts (password protected)
		SET {<int16>}	(?)	Set (query) the auxiliary (external) high voltage in volts.
	:INTavg {<uint8>}		(?)	Set (query) the number of integrations to average per reading (1 to 15)
	:MONitor {1|2|3}		(?)	Set (query) the position function that is performed internally by the I404, and thus the signals that are put out on the analog voltage and frequency monitor outputs. 1 = no position calculation, monitor outputs map the input currents 2 = quadrant mode calculation, monitor outputs A and B map X and Y positions 3 = split mode calculation, monitor outputs A and B map X and Y positions
	:PERiod {<float32>}		(?)	Set (query) integration period in seconds.
	:POLarity {0|1}		(?)	Set (query) external gate polarity (external trigger only) 0 = rising edge 1 = falling edge
	:POSition {<uint16>, 0|1}		(?)	Set (query) the threshold value (% of full current scale in use) for data to be included in position calculations, and the polarity of the current readings being used in the calculations. 0 = +ve currents 1 = -ve currents
	:RANGe {<float32>}			Set (query) a full scale current range in amps. Integration period and capacitor selection are calculated by the I404.
	:READavg {<uint8>}		(?)	Set (query) the number of ADC readings to be taken in each integration period (0 to 15).
	:RESolution {<uint8>}		(?)	Set (query) the number of bits of effective resolution, (16 to 20). The I404 calculates the number of integration periods and ADC readings per integration.
	:SWITch {<uint16, uint16, int8, int8>}		(?)	Set (query) the reset, settle, Sw1 offset, Sw1 width in usec.
FETCh	:CHArge?			Return the last measured charge data in coulombs. Returns

				<integration time, charge, over range flags>
	CURRent?			Return the last measured current data in amps. Returns <integration time, charge, over range flags>
	DIGital?			Fetch digitals bit0 = measuring bit1 = waiting trigger bit2 = calibrated bit3 = HV enabled bit4 = external gate present
INITiate				Initiate readings on valid trigger
READ	CHArge?			Forces a measurement and returns the measured charge data in coulombs. Returns <integration time, charge, over range flags>
	CURRent?			Forces a measurement and returns the measured current data in amps. Returns <integration time, current, over range flags>
	DIGital?			Read digitals bit0 = measuring bit1 = waiting trigger bit2 = calibrated bit3 = HV enabled bit4 = external gate present
	:HIVOltage?			Read HV output sense
	:POSition?			Perform position calculation and return results, in configured calculation mode
READ?				Do same READ command as previous (defaults to charge if no previous)
STATus	:OPERation	:CONDition?		Query operation register status condition bit
		:ENABle	(?)	Set (query) operation register status enable bit
		:EVENt?		Query operation register status event bit
	:QUEStionable	:CONDition?		Query questionable register status condition bit

		:ENABle		Set (query) questionable register status enable bit
		:EVENt?		Query questionable register status event bit
SYSTem	:COMMunication	:CHECKsum {0|1}		Set appending checksum to all replies (password protected) 0 = off 1 = on
		:TERMinal {0|1}	(?)	Set (query) terminal mode (password protected) 0 = terminal mode off 1 = terminal mode on In terminal mode, ACK and NACK are not sent, and "OK" or error response is sent for all valid commands that do not otherwise generate a response.
		:TIMEout {<timeout>}	(?)	Set (query) timeout in seconds (password protected); 0 = timeout disabled. I404 will go to unconnected state if no valid message is received in the timeout period.
	:ERRor?			Query the next error in the error event queue.
	:FREQuency {<Hz>}		(?)	Set (query) the dominant noise frequency <Hz> to be suppressed in the calibration routine. This will generally be the line frequency (50 or 60).
	:PASSword {<pass>}		(?)	Set (query) the administrator password <pass> to allow access to protected functions. The default is <12345>.
	:SAFEstate {0|1}		(?)	Set (query) whether the I404 goes to the safe state when unconnected. 0 = do not go to safe state 1 = go to safe state Safe state is HV off.
	:SERIALnumber {<serial>}		(?)	Set (query) the serial number <serial> of the I404, max 10 alphanumeric characters. Password protected.
	:VERSion?		(?)	Query the SCPI standard version
TRIGger	:COUNt?			Query the trigger count since the last INITiate
	:DELAY {<uint16>}		(?)	Set (query) the trigger delay for message trigger mode. This parameter permits all devices on a loop to start an acquisition at the same time, despite message propagation

				delays around the loop.
	:SOURce {<source>}		(?)	Set (query) the trigger source to <source>. The options are: <internal> <external_start>

20.3 Terminal Mode

SCPI is not ideal for a user trying to control the I404 from a terminal program. A more interactive terminal mode can be turned on by sending the command

SYSTem:COMMunication:TERMinal 1

After this command is executed, the I404 will provide a response to every command. Valid query commands will get their normal reply. Other commands will generate an <OK> response if they were interpreted without errors, or an error message if they could not be interpreted. The non-printing ACK and BEL characters are not sent.

21 Software updates

The I404 has three embedded firmware releases.

Firmware	Function
FPGA (.pof file)	General logic, loop message passthrough, ADC reading and averaging
PIC Boot (.hex file)	Boot up, code upload
PIC Application (.hex file)	Main application; calibration, conversion to floating point values, range control, HV PSU control, I/O readback, host communications, SCPI instrument model.

The PIC microcontroller boot code should never need updating. Changing it requires access to the circuit board and dedicated programming tools to load new code. If the boot code does need to be updated, your supplier will contact you and make arrangements either to return the unit for upgrade, or to have an engineer call.

The FPGA code handles the low-level timing and control of the I404. It is unlikely to require updating, but if it does it can be uploaded using the PSI Diagnostic host. New code releases will be provided by your supplier, or can be downloaded from the Pyramid Technical Consultants, Inc. website. The upload can be performed directly from the PC host via RS-232, RS-485 or fiber-optic, or routed via an A300 or A500 controller. On the Device tab, click the “Select .fhex file” button and navigate to the relevant file. The code will then load. The process takes a few minutes. You will then be prompted to reboot the device.

The PIC microcontroller application code may be updated periodically to add new operating features. New code releases will be provided by your supplier, or can be downloaded from the Pyramid Technical Consultants, Inc. website. The hex file can be loaded using the PSI Diagnostic host without any need to access the unit. The upload can be performed directly from the PC host via RS-232, USB or fiber-optic, or routed via an A500 controller. On the Device tab, click the “Select .hex file” button and navigate to the relevant file. The code will then load. The process takes about 60 seconds, and the I404 will start running the new code immediately.

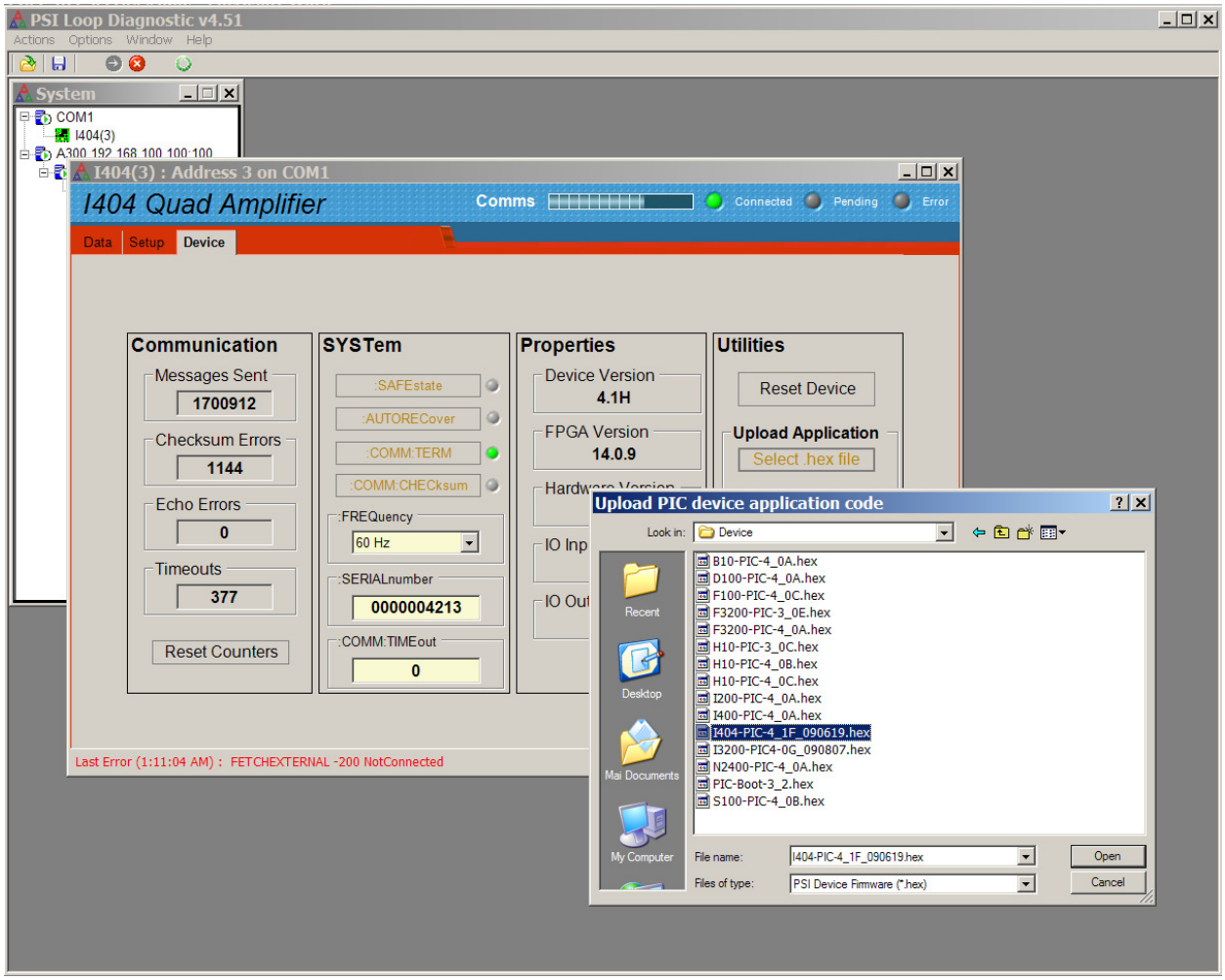

Figure 44. Selecting the hex file to load.

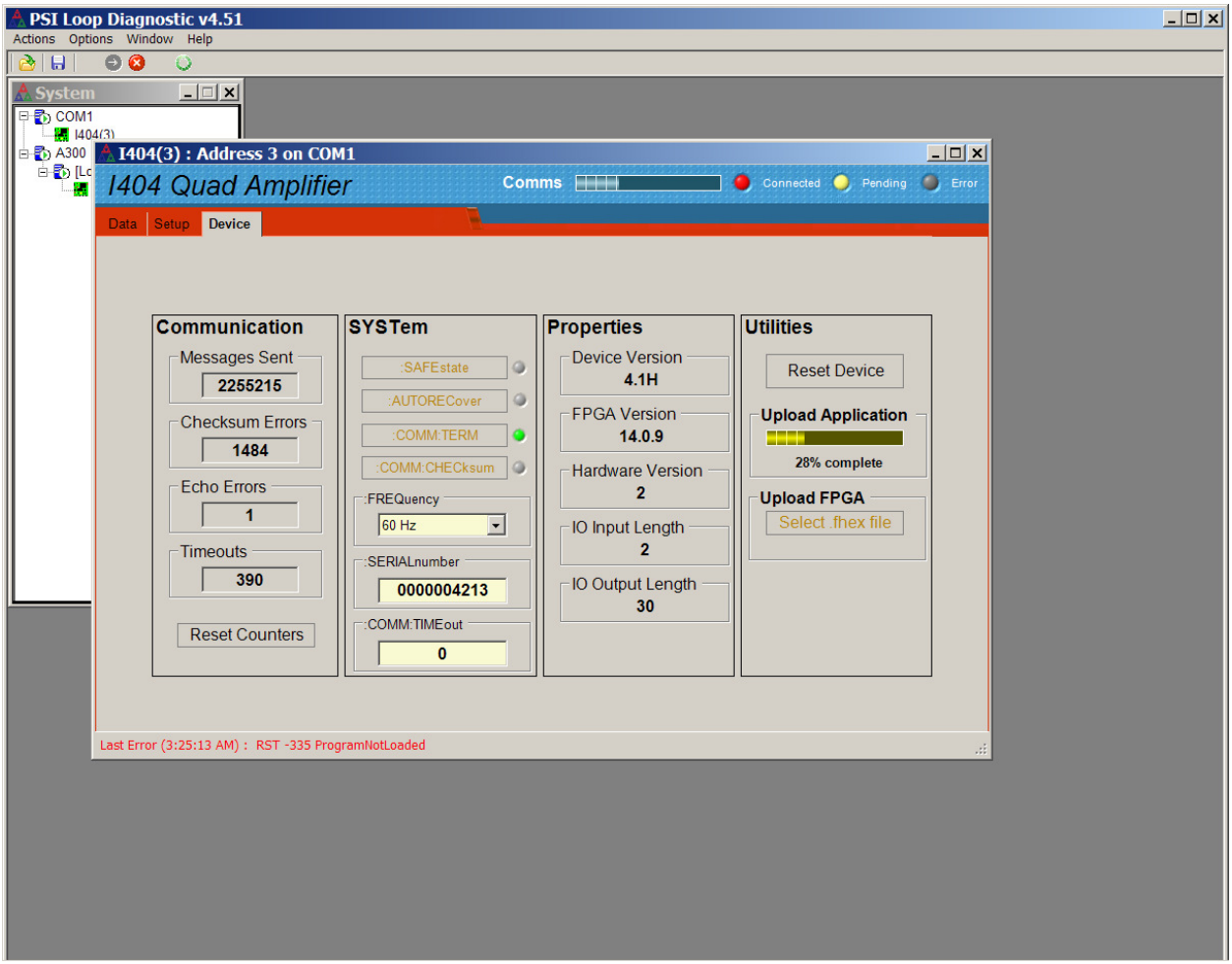

Figure 45. Upload in progress.

22 Techniques for Making Low Current Measurements

Measurements of currents of around 10 nA and below require some care to prevent unwanted interference that can distort the results. In particular, the conductor that carries the current to the I404 input (the sensitive node) must be carefully isolated and guarded to ensure unwanted currents cannot flow into it.

When an unexpectedly high background offset current is seen, the first thing to do is to check again with the signal input(s) disconnected from the I404. This will isolate the problem to the external measurement circuit, or within the I404 itself.

22.1 Guarding and screening

If the sensitive node is separated from a voltage source (such as a power rail) by an insulating layer, then a small current will flow through the finite impedance of the insulator.

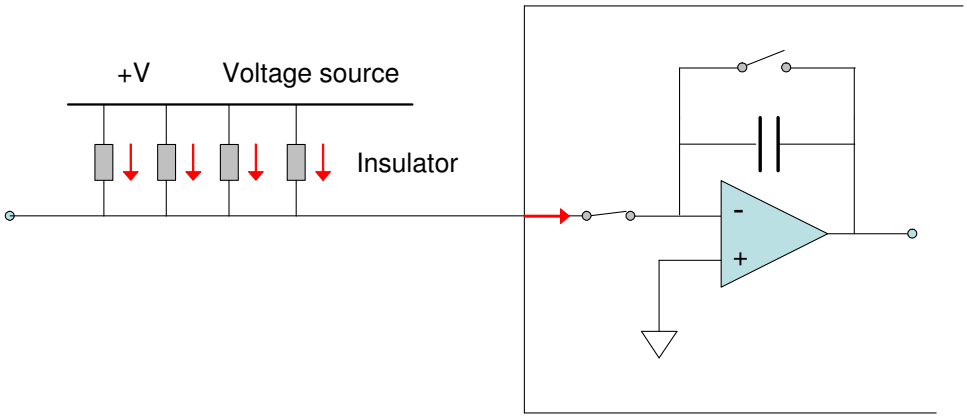

Figure 46. Offset current entering an unguarded input

For example, a 10 V conductor separated from the sensitive node by 1 Gohm of total resistance would drive in 10 pA of background current. If the insulation is compromised by contamination, then the problem is magnified. A solution is to provide a guard shield around the sensitive node, at the same electrical potential as the node. Leakages currents across insulators now flow to the guard, where they do not affect the reading

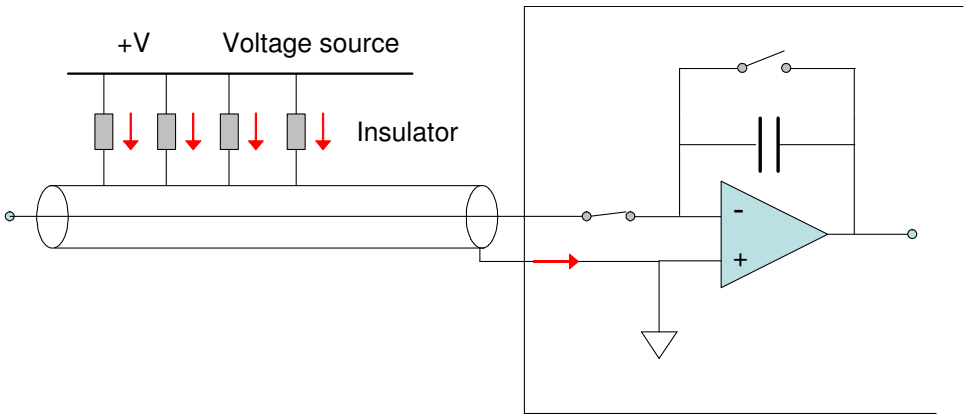

Figure 47. Guarded input

AC fields in the environment can induce AC currents in the sensitive node. Depending upon the frequencies and the integration time in use, these may appear as noise fluctuation in the signal. An outer cable screen can be used to shield the sensitive node from external fields.

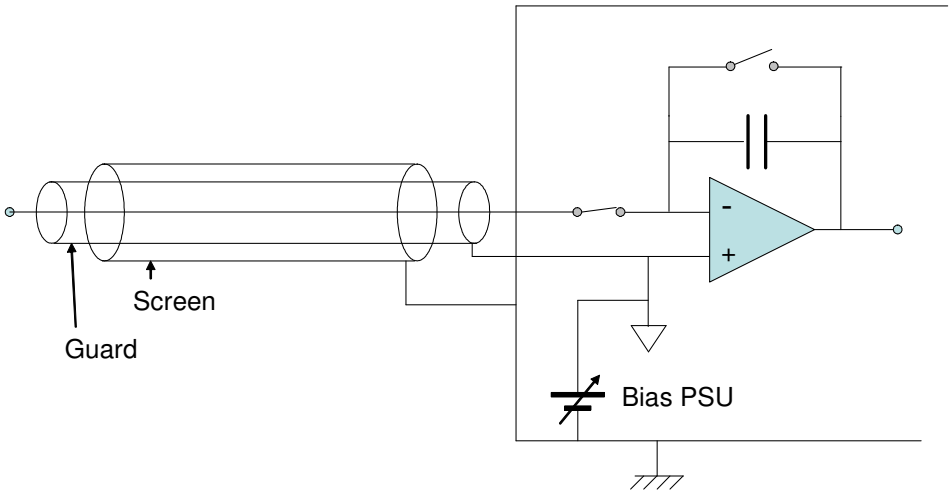

Figure 48. Guarded and screened input

22.2 Temperature

Offset factors are generally exacerbated by increased temperatures. Temperature fluctuation can appear as variation in the reading. When very small currents need to be measured, the experimental arrangement should be temperature stabilized as far as possible.

22.3 Triboelectric effects

When there is relative movement of insulators and conductors in signal cabling, free charge is released. This is particularly the case for the screen of coaxial cable. The resulting potential

difference can drive small currents to the signal conductor across the high impedance of the insulator. Additionally, charge may leak in directly if there are any breaks in the insulator.

Special low-noise cable is available with graphite lubrication bonded to the insulator, to reduce charge generation, and to conduct any released charge away harmlessly. Belden low-noise RG-58 9223 has been tested with Pyramid Technical Consultants, Inc. gated integrator products and gives good results. The following figure shows triboelectric noise measured when standard RG-58 coaxial cable is flexed, and the result of the same flexing on low-noise RG-58.

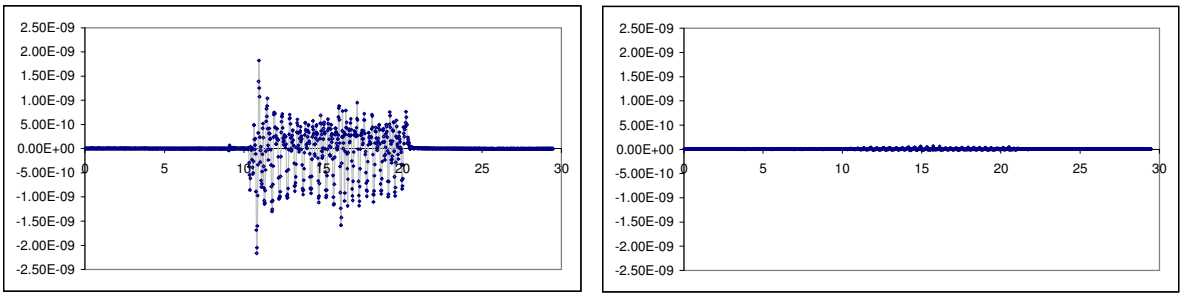

Figure 49. Triboelectric noise from flexing conventional RG-58 cable (left) compared to low-noise RG-58 (right)

Cables from other suppliers with similar specifications will be suitable. Other mitigations include keeping the signal cables short and motionless.

22.4 Battery Effects

Ionic contamination, such as salt from fingerprints, which connects to the sensitive node, can give battery effects, particularly in the presence of moisture, which can drive unwanted currents. Any insulating surfaces in contact with the sensitive node must be clean. Humidity levels should be such that there is no moisture condensation. Wherever possible the sensitive node should be insulated by vacuum or air.

22.5 Piezoelectric Effects

Ceramic and plastic insulators can release charge when under mechanical stress, which may be collected on the sensitive node. The effect is generally small (less than 10 pA), and can be avoided by eliminating stresses in cables and connections.

22.6 Integration Period and Synchronization

The I404 provides considerable flexibility in setting the integration time interval, and synchronizing the integration to external events. The integration method is inherently good at averaging noise. Very low current currents generally require the smallest available feedback capacitor and the longest practicable integration time to build up a readily measurable voltage. For example, a 1 pA current integration on a 10 pF feedback capacitor requires 10 seconds to

develop 1 V. Background offset noise is also integrated, of course, and cannot be distinguished from the signal. This sets the ultimate detection limit.

The plots in figure 47 illustrate how a 5 pA signal from a small ionization chamber becomes clearly distinguishable from a reference background signal, and the noise reduces, as the integration period is increased from 1 msec to 100 msec to 10,000 msec.

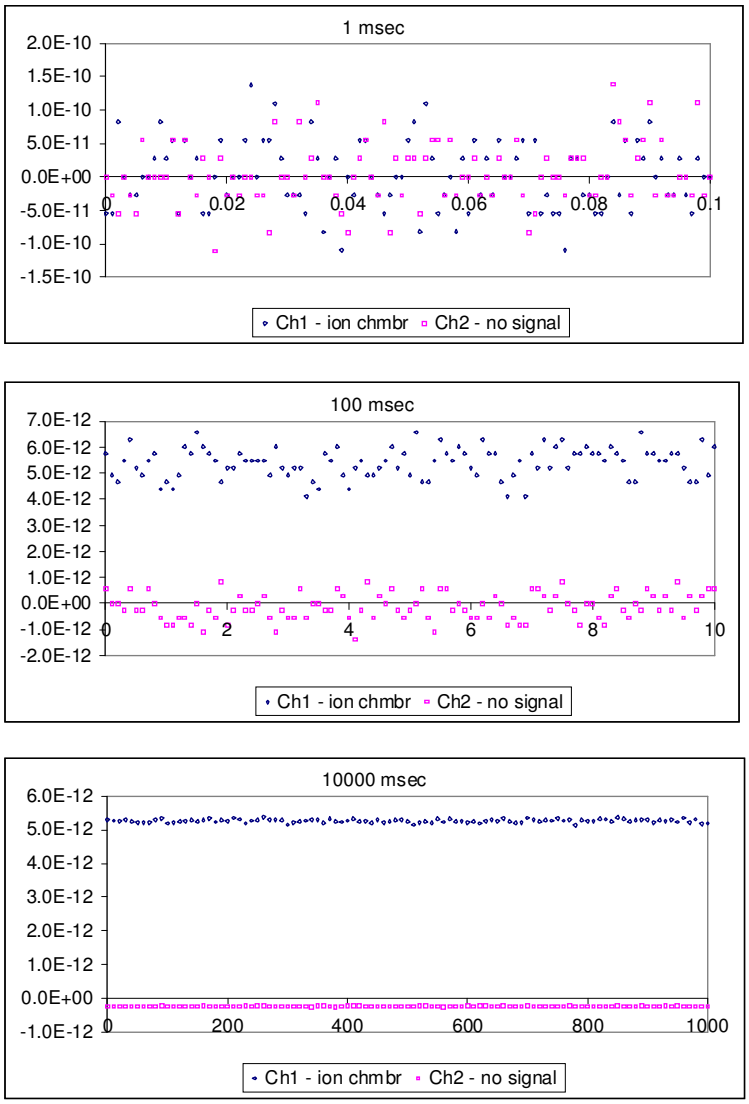

Figure 50. Separation of a 5 pA signal from background

Where there are known dominant noise frequencies in current measurements, for example line voltage interference, these can be suppressed by choosing an integration periods that is an integer multiple of the noise period. For example, 50 Hz or 60 Hz noise from the power line is present in most environments. This can be completely removed in the I404 by selecting the integration period as follows:

Noise frequency	Integration period choices to eliminate noise
50 Hz	20.00, 40.00, 60.00, 80.00, 100.00 …. K x 20.00 msec
60 Hz	16.67, 33.33, 50.00, 66.67, 83.33, 100.00, …. K x 16.67 msec

The 100 msec value is the smallest period common to both line frequencies, and is used for the startup default current range of the device.

Very small charge package measurements should be optimized by synchronizing the integration carefully around the arrival of the charge. This minimizes the amount of background offset current that is included in the reading. Often the arrival of the charge is associated with an event in the system which can be used to drive the external gate input of the I404 to obtain the required synchronization.

22.7 Summary

Factor	*Typical noise offset current*	*Mitigation*	*Typical noise after mitigation*
Triboelectric effects in cable	10^{-8} A	Reduce cable lengths. Keep cable from moving. Use low-noise cable.	10^{-12} A
Current across insulators from voltage sources	10^{-7} to 10^{-10} A	Guard the sensitive node Use triaxial cable	10^{-12} A
AC interference	10^{-6} to 10^{-10} A (AC)	Used screened (triaxial) cable	10^{-12} A
AC interference	10^{-6} to 10^{-10} A (AC)	Use integration periods that are an integer multiple of the dominant noise frequency.	10^{-12} A
Contaminated insulators	10^{-8} A	Clean insulating surfaces with solvent Use air insulation where possible Keep humidity low	10^{-13} A
Piezoelectric effects	10^{-12} to 10^{-13} A	Avoid mechanical stresses and vibration, in the sensor and cable.	Negligible
Resistor Johnson noise	$< 10^{-14}$ A	None – fundamental limit set by signal source resistance	
Temperature fluctuation	10^{-9} to 10^{-12} A	Temperature stabilize the	10^{-10} to 10^{-14} A

	fluctuation	whole measurement apparatus	fluctuation
Elevated temperature	10^{-13} to 10^{-11} A	Reduce temperature of the whole measurement apparatus	10^{-13} A

23 Fault-finding

Symptom	*Possible Cause*	*Confirmation*	*Solution*
High background current	Resistive path to signal input due to missing or broken guard.	Disconnect input – background should reduce to specification levels	Ensure good guard integrity all the way to the signal source.
	High humidity	Problem varies with relative humidity.	Ensure there are no water-absorbent insulators. Reduce the humidity levels.
	Internal contamination.	Background current remains high with inputs disconnected.	Contact your I404 supplier for advice or to organize a return for cleaning.
High noise levels	Integration time too short for signal being measured	Noise level reduces with integration period	Use an appropriate integration time for the signal level.
	RF pickup	Noise varies with cable position, status of neighboring equipment.	Check integrity of outer screens of signal cables.
	Line voltage pickup	Noise level drops sharply if integration period is 16.7 msec (60 Hz) or 20 msec (50 Hz)	Keep I404 and signal cables clear of unscreened high current mains voltage. Use integration periods (N/line frequency).
No signal	Small signal lost in noise		Use longer integration time.
Signal does not vary as expected	Integrators are overrange.	Overrange flags are set, signal recovers if integration period is reduced.	Reduce the integration period or use the larger feedback capacitor.

Measured currents or charges are inaccurate by up to 15%	Unit not calibrated.		Calibrate.
	Calibration was carried out while a signal current was present.	Internal calibration source does not measure as 500nA with all inputs disconnected.	Repeat calibration with no external signal present.
High background offset current	Various causes		Refer to section on low current measurements.
500 nA background on a channel.	Internal calibration source has been turned on.		Turn off calibration source.
Compensation factors do not affect current readings.	This is correct behavior – factors only affect values used in position calculations, and optionally those sent to the monitor outputs.		
No or incorrect response to external trigger or gate	Incorrect gate polarity selected.		Use correct polarity.
	I404 not configured to respond to external gate.		Use correct setup.
No high voltage	Shorted to ground in external circuit	Monitor HV reading zero or very low relative to setpoint. Monitor value recovers if I404 disconnected from the external circuit.	Eliminate shorts to ground.
Cannot set high voltage	Trying to set above the maximum allowed value soft limit.	Sets OK if a lower value is chosen.	If allowed, increase the maximum allowed value.

I404 stops measuring	Communication link timeout		Investigate and fix communications issue. Use a longer timeout setting.
Unable to communicate with I404	Wrong mode switch or address setting	Check mode switch setting.	Use correct switch settings. Switches can be changed while the unit is operating.
Unable to connect on fiber loop	Connector still fitted to serial port		Remove serial connector.
	Tx and Rx fibers are swapped		Connect fibers correctly
Communications interruptions	Other processes on PC host interfering with comms ports.		Use a dedicated PC with simple configuration and minimum number of processes running.
Unable to connect on RS232	Another program is using the COM port.	Try to access the required port with Windows Hyperterminal.	Choose another port or close down the other program.
	Incorrect port settings.	Try to connect with the .htm file supplied with the unit.	Correct the settings.
	Incorrect cable.		Make up a suitable cable.
Unable to connect on RS485	Incorrect cable.		Make up a suitable cable.
	Incorrect port settings.		Correct the settings.
	Remote converter not set for four-wire RS-485		Correct converter settings.
	Remote converter not powered		Turn on power.
	Mode switch set for RS-232		Use correct mode setting.
Monitor outputs do not map	Monitors have been set to		Set the correct mode.

the current inputs	output position functions		
Monitor frequency appear incorrect	Reflections in long coaxial cable.	Look at monitor signal with an oscilloscope	Terminate with 50 ohm at the receiving end.
Monitor outputs do not reflect compensation factor changes	Use factors for monitor outputs bit is not set.	Check whether bit is set.	Use appropriate setting.
Position output inaccurate	Incorrect compensation factors		Determine and load the correct factors
Position readout incorrect	Signals are not connected to the correct inputs.		Connect the signals from the sensor as necessary for the position algorithms.

24 Maintenance

The I404 does not require routine maintenance. There is risk of contamination which may degrade performance if the case is opened. There are no user-serviceable parts inside.

CAUTION. High voltages can be present inside the case if the HV option is fitted. Do not open the case when power is applied.

The I404 is fitted with a 1.1 A automatically resetting positive temperature coefficient (PTC) fuse in the 24 VDC input. No user intervention is required if the fuse operates due to overcurrent. The fuse will reset when the overcurrent condition ends.

25 Returns procedure

Damaged or faulty units cannot be returned unless a Returns Material Authorization (RMA) number has been issued by Pyramid Technical Consultants, Inc. If you need to return a unit, contact Pyramid Technical Consultants at support@ptcusa.com, stating

- model
- serial number
- nature of fault

An RMA will be issued, including details of which service center to return the unit to.

26 Support

Manual and software driver updates are available for download from the Pyramid Technical Consultants website at **www.ptcusa.com**. Technical support is available by email from support@ptcusa.com. Please provide the model number and serial number of your unit, plus relevant details of your application.

27 Disposal

We hope that the I404 gives you long and reliable service. The I404 is manufactured to be compliance with the European Union RoHS Directive 2002/95/EC, and as such should not present any health hazard. Nevertheless, when your I400 has reached the end of its working life, you must dispose of it in accordance with local regulations in force. If you are disposing of the product in the European Union, this includes compliance with the Waste Electrical and Electronic Equipment Directive (WEEE) 2002/96/EC. Please contact Pyramid Technical Consultants, Inc. for instructions when you wish to dispose of the device.

28 Declaration of Conformity

Declaration of Conformity

Issued by: Pyramid Technical Consultants, Inc.
1050 Waltham Street, Lexington MA 02421, USA

The undersigned hereby declares, on behalf of Pyramid Technical Consultants, Inc. that the referenced product conforms to the provisions as listed. Refer to the document: *Extension of testing and analysis to the PTC product line, December 10, 2007,* and its continuations, and the *I400 Technical Construction File* for detailed testing information.

Product:	I404 Quad electrometer
Year of initial manufacture:	2009
Applicable Directives:	73/23/EEC Low Voltage Directive: Laws for electrical equipment within certain voltage limits 89/336/EEC – EMC Directive: Laws relating to electromagnetic compatibility
Applicable Standards:	IEC 610101:2002 (2nd Edition) UL 61010-1:2004 EN 61326: 1997+A1:1998+A2:2001 EN 55011:1998, A2:2002 EN 61000-6-2:2001 – Electromagnetic Compatibility Generic Standard, Immunity for Industrial Applications
Issuing Agencies:	Safety: TUV Rheinland North America. 12 Commerce Rd, Newtown, CT 06470 USA EMC: TUV Rheinland North America. 12 Commerce Rd, Newtown, CT 06470 USA
Applicable Markings:	TUV, FCC, CE
Authorized by:	Paul Bunn President, Pyramid Technical Consultants, Inc.
Date:	24 June 2009

The Technical Construction File required by theses Directives are maintained at the offices of Pyramid Technical Consultants, Inc, 1050 Waltham Street, Lexington MA 02421, USA
A copy of this file is available within the EU at the offices of Pyramid Technical Consultants Europe, Ltd, 2 Chanctonbury View, Henfield BN5 9TW, United Kingdom.

29 Hardware Versions

This user manual refers specifically to the I404 at hardware revision 1. Major differences between versions that are, or have been in regular production are summarized below.

Revision	***Changes***
Rev 1	First production version
Rev 2	Added 2 kV and 3 kV HV supply options Added HV filter.

30 Firmware compatibility

The following combinations are compatible, with the highlighted combinations the recommended ones that take most advantage of software improvements.

Hardware revision	***I404 device***	***I404 FPGA***	***PTC Diagnostic version***	***A500 loop controller***
Rev 1	4.1F	14.0.8	4.30	
Rev 1	4.1I	14.0.11	4.51	
Rev 1	**4.1K**	**14.0.11**	**4.58**	
Rev 2	4.1H	14.0.9	4.51	
Rev 2	**4.1K**	**14.0.11**	**4.58**	
Rev 2	**4.1O**	**14.0.19**	**4.128**	**5.50 / 2.7.52 / 8.5**

Versions 4.1I, 14.0.11 introduced compensation factors.

Versions 4.1, 14.0.19 made changes to how compensation factors were used and applied to monitor outputs. This required changes to the A500 loop controller also, for customers who use the I404 on a fiber optic loop.

31 User Manual Revision History

The release date of a Pyramid Technical Consultants, Inc. user manual can be determined from the document file name, where it is encoded yymmdd. For example, M10_UM_080105 would be a M10 manual released on 5 January 2008.

Version	***Changes***
I404_UM_090625	First general release
I404_UM_091028	Changed PSI Diagnostic screen shots to version 4.51. Added information about 2 kV and 3 kV HV options and HV filter.
I404_UM_091202	Added description of compensation factors introduced in firmware 4.1I/14.0.11. Updated screen shots to show compensation factors. Updated ASCII commands table to show command to set and read compensation factors.
I404_UM_100414	New screen images and descriptions for position readout to reflect improvements in 4.58 PSI Diagnostic. Corrected description of response to ASCII read? command. Added section on disposal. Removed loop controller from firmware compatibility table.
I404_UM_100505	Corrected error in RS-485 pinouts.
I404_UM121121	Describe changes to compensation factor handling (device 4.1O and later) New ASCII commands added for compensation parameters, and fetch data.