Run12 preparations

polar. mtg.
23.11.11

Installation

- so far: detectors, sources
- next: targets

Checkouts

- DAQ, pulser runs
- Bias, currents
- α runs

Detectors: installed ✓

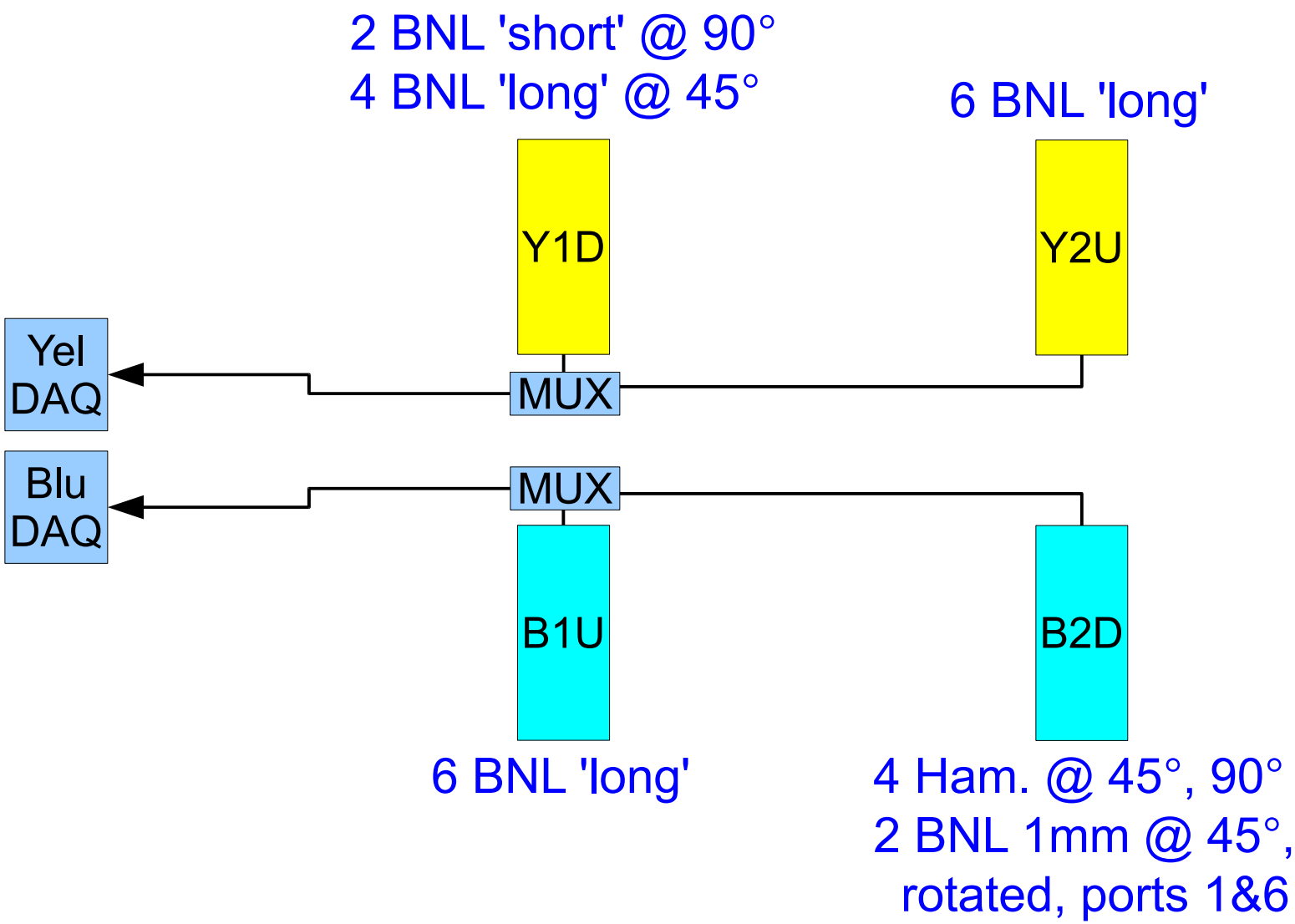

Sources

- B1U extension brackets, B2D Gd installed ✓
- Will put other Gd pair in Y2U, run DAQ simultaneous w/ B2D ↘

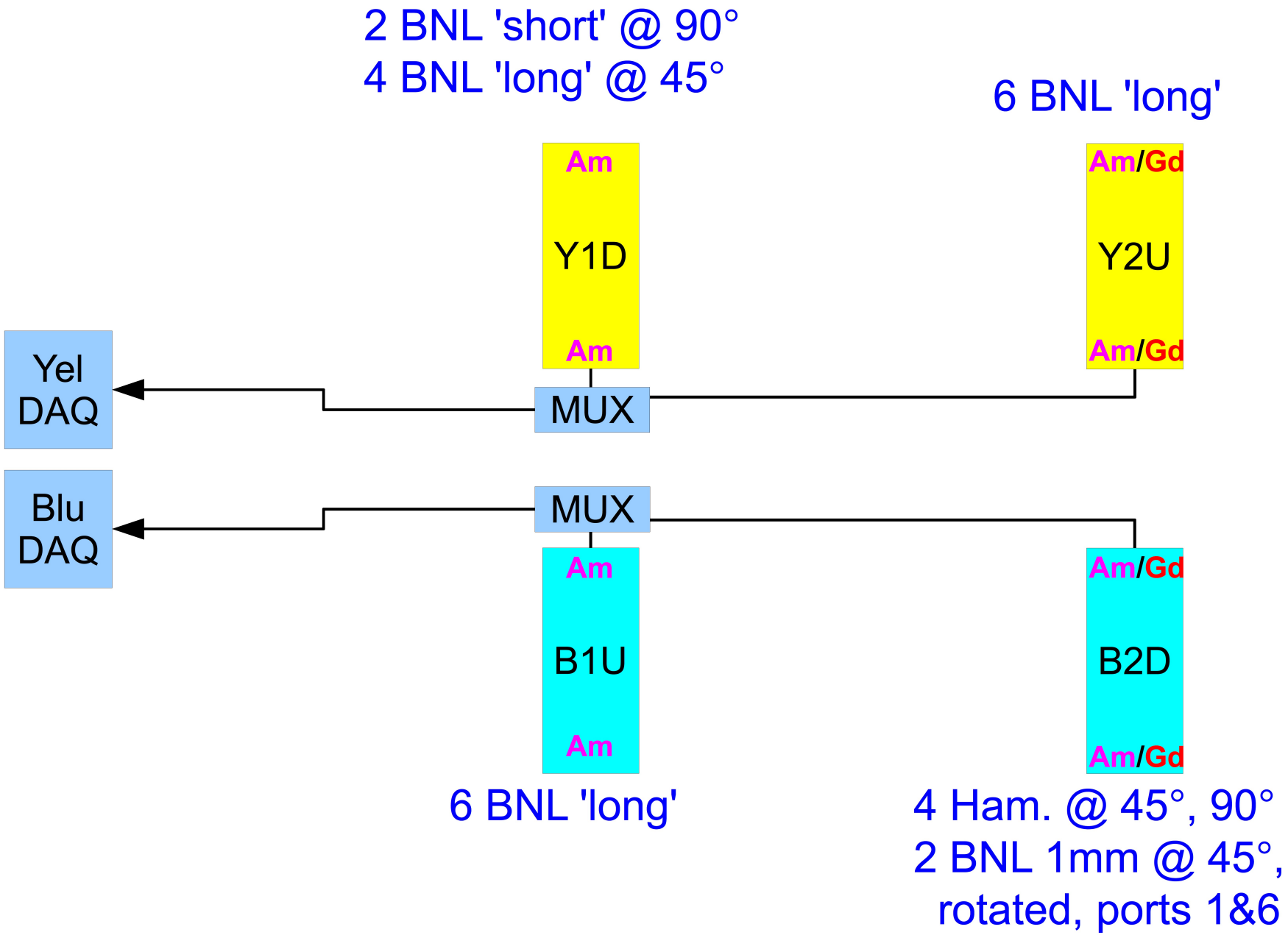

Targets: agreed, next step ↘

2 BNL 'short' @ 90°
4 BNL 'long' @ 45°

6 BNL 'long'

all standard type
25 nm thick
7-10 μ wide
except as noted

3-prong H6 Y1D

Y2U

Yel DAQ

MUX

Blu DAQ

MUX

high | H5
twist | H6

B1U

high | V5
twist | V6

B2D

H4 50-75 μ
H6 5 m, ∡ beam

6 BNL 'long'

4 Ham. @ 45°, 90°
2 BNL 1mm @ 45°,
rotated, ports 1&6

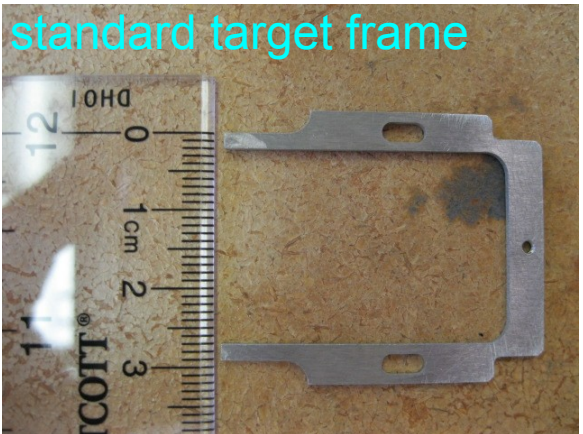

Checkout: DAQ, bias, α's

- Pulser runs all 4 polarimeters:
  I didn't look at every channel, but all are getting hits
  Will look in more detail next, start with Igor's reports

- Yellow still vented: no bias, α's

- B1U (reused BNL det.)
  bias @ 110 V, I_{bias}=2.5-4 μA
  ~where we left off in April:

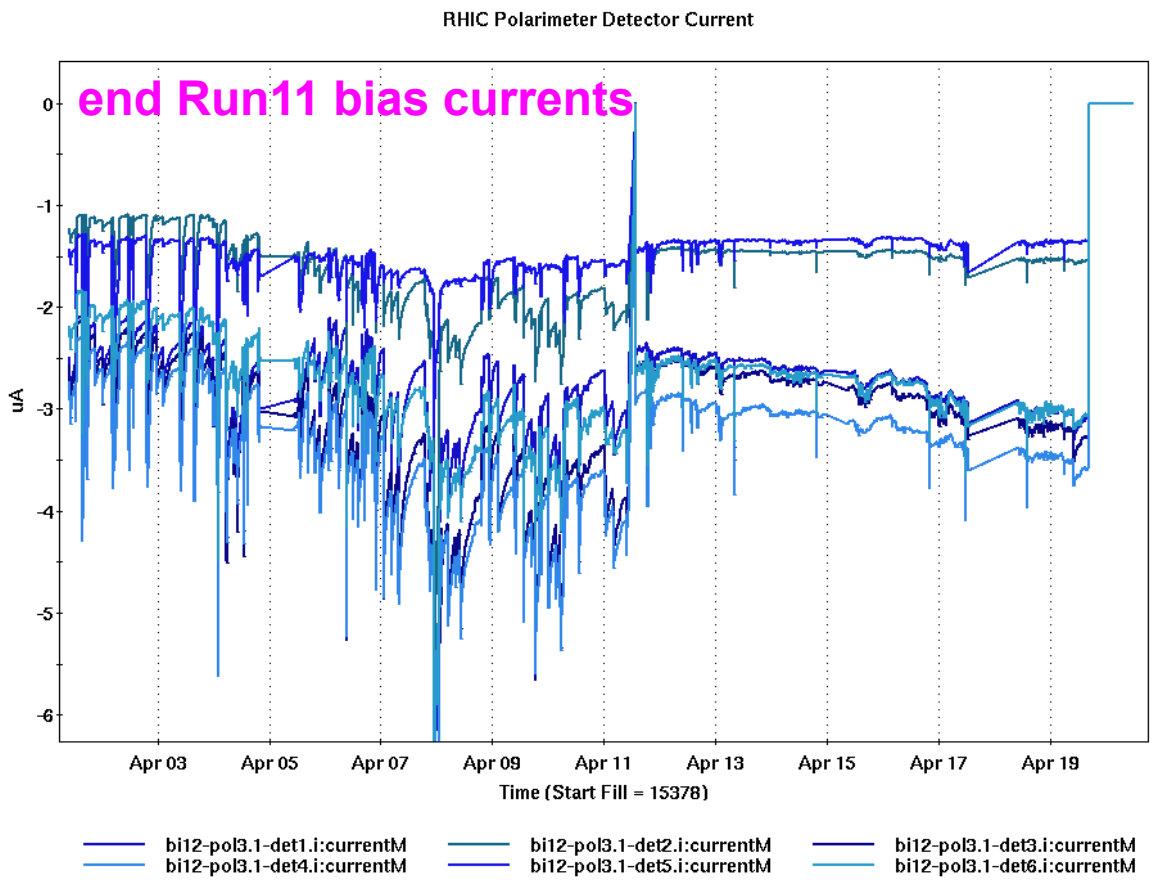

B1U Am α's: ext. brackets

- In Run11 w/o extension bracket α's missed 1st, last 3 chan:
- Extension brackets installed; now only miss 1st, last chan.:
- Clear improvement, we can live with it

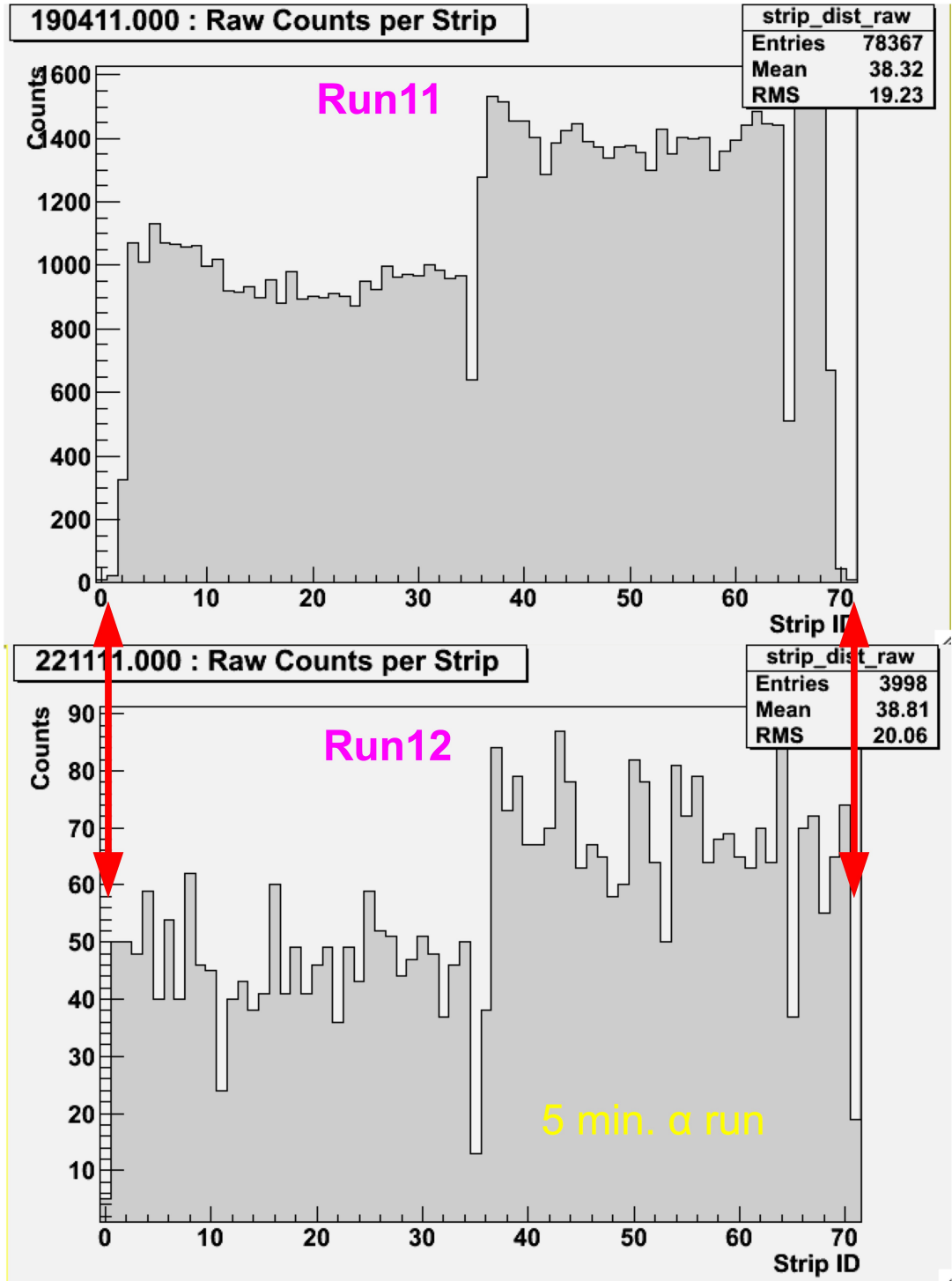

B2D Ham. bias, α's

- B2D Ham. (det. 2-5) bias @ 10 V;
  if labels correct: I_{bias} = 1.67 (det. 2) [not sure units here, μA?]
  0.18 (det. 5)
  0.0 (det. 3)
  0.22 (det. 4)
- Only short α run (10 min.) made, low stat.
- But clear signs of 2 α's (Gd&Am), even det. 3:

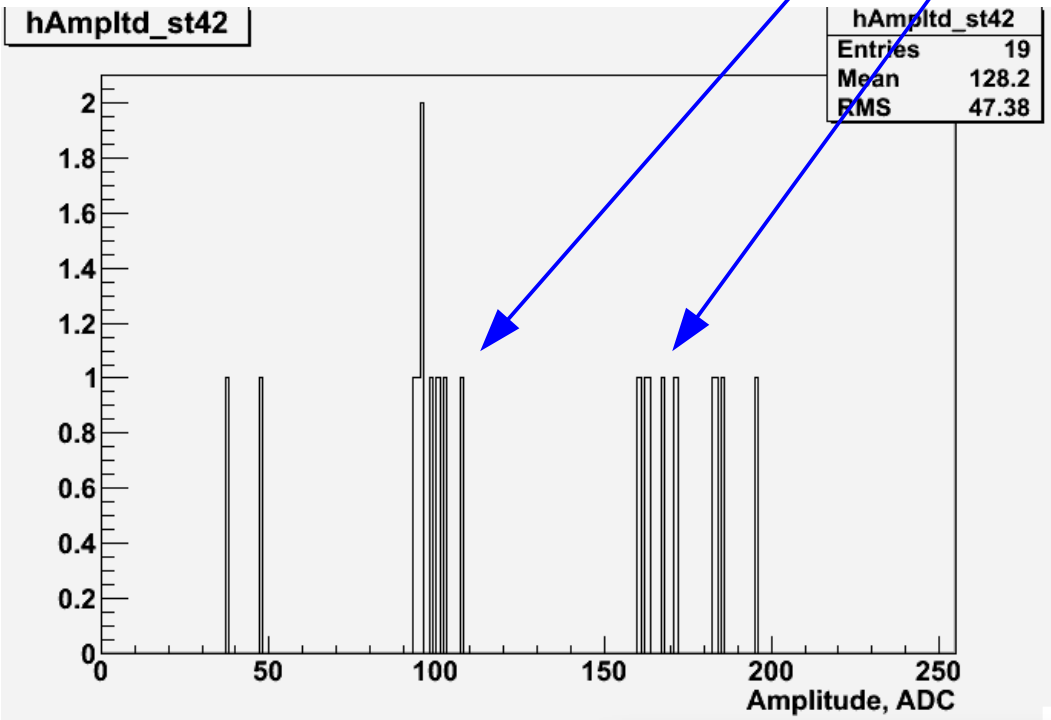

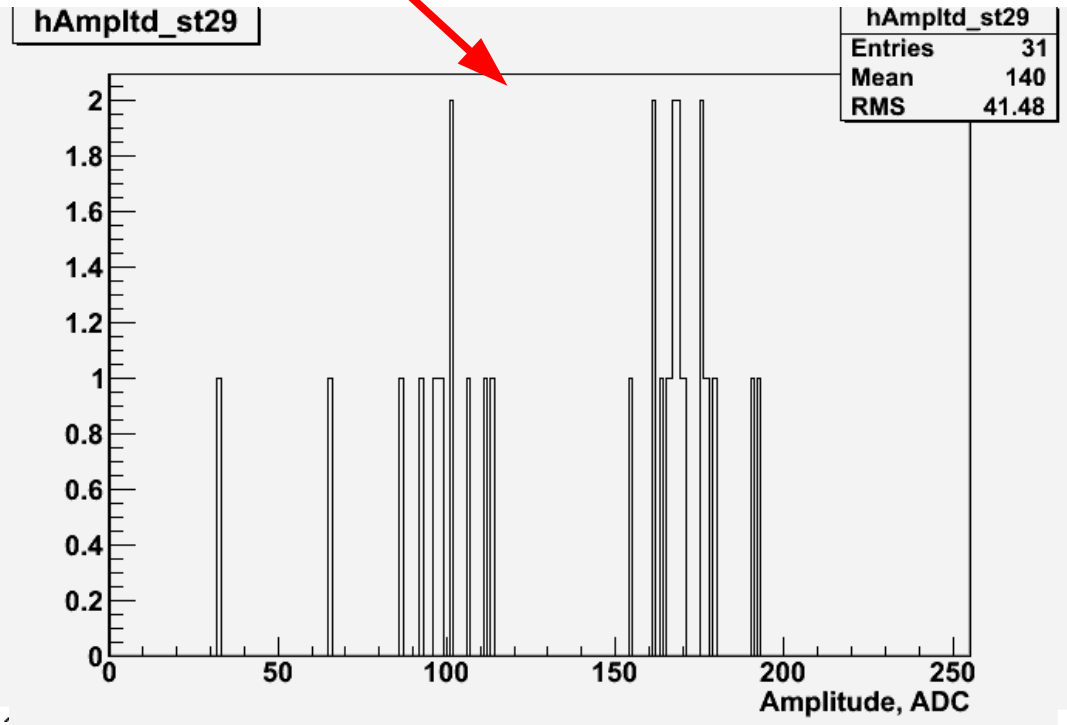

B2D 1mm BNL bias, α's

- B2D 1mm BNL (det. 1,6) bias @ 110 V, I_{bias} = 0.2 / 0.04
- ~20 min. α run, nice Gd/Am peaks:

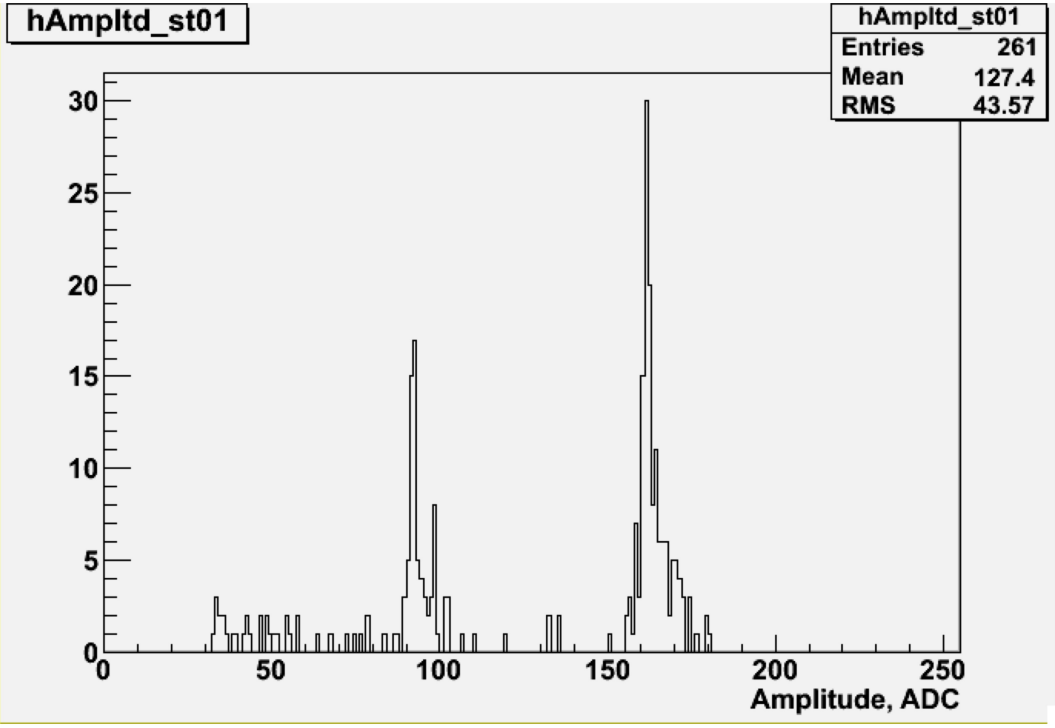

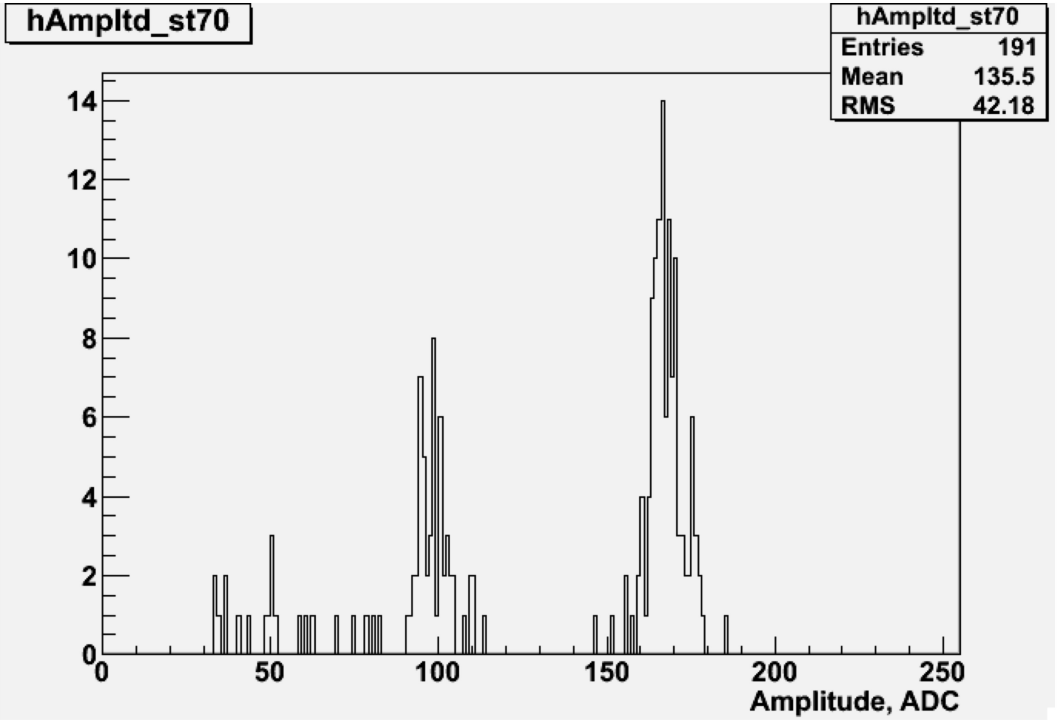

- Noticed 2 chan. ½ α's; were full height in pulser run

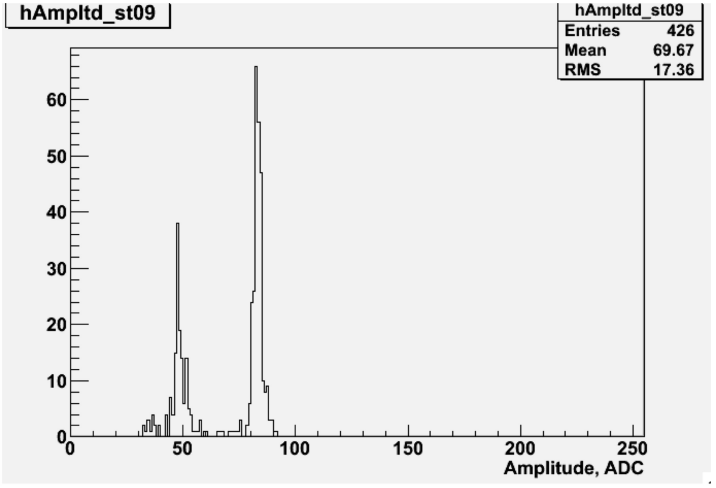

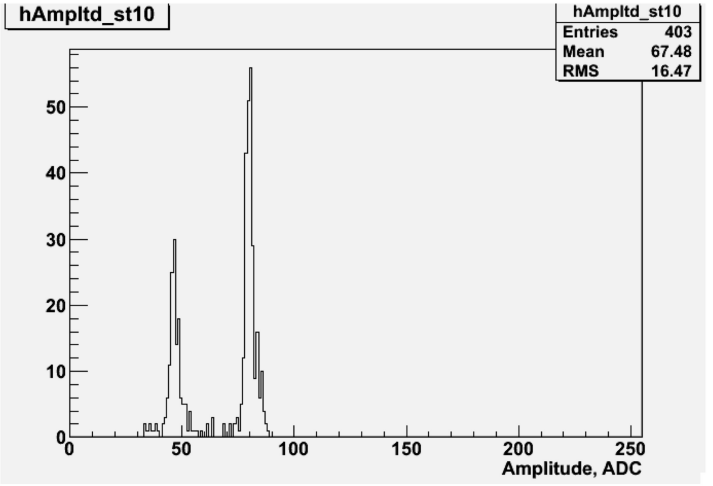

Summary

- Globally DAQ, dets. OK; **target installation can proceed**
- Source extension B1U helped
- Getting nice 2-α peaks in B2D
- Some single channel problems to investigate