Modification of the target holder

Problem

- Provide surface for the field lines to “spread out”
- Must fit into the tank

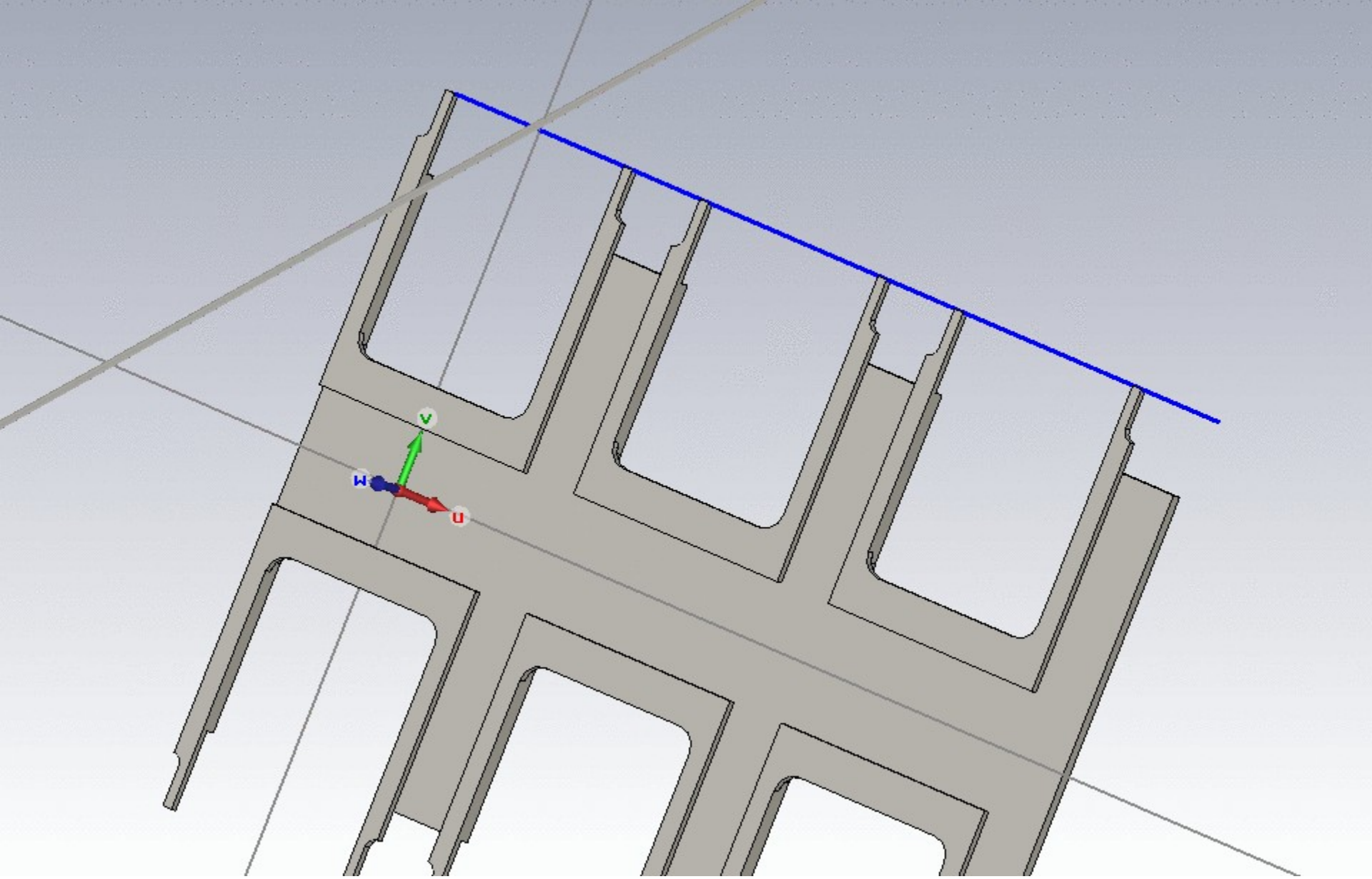
v
w
u

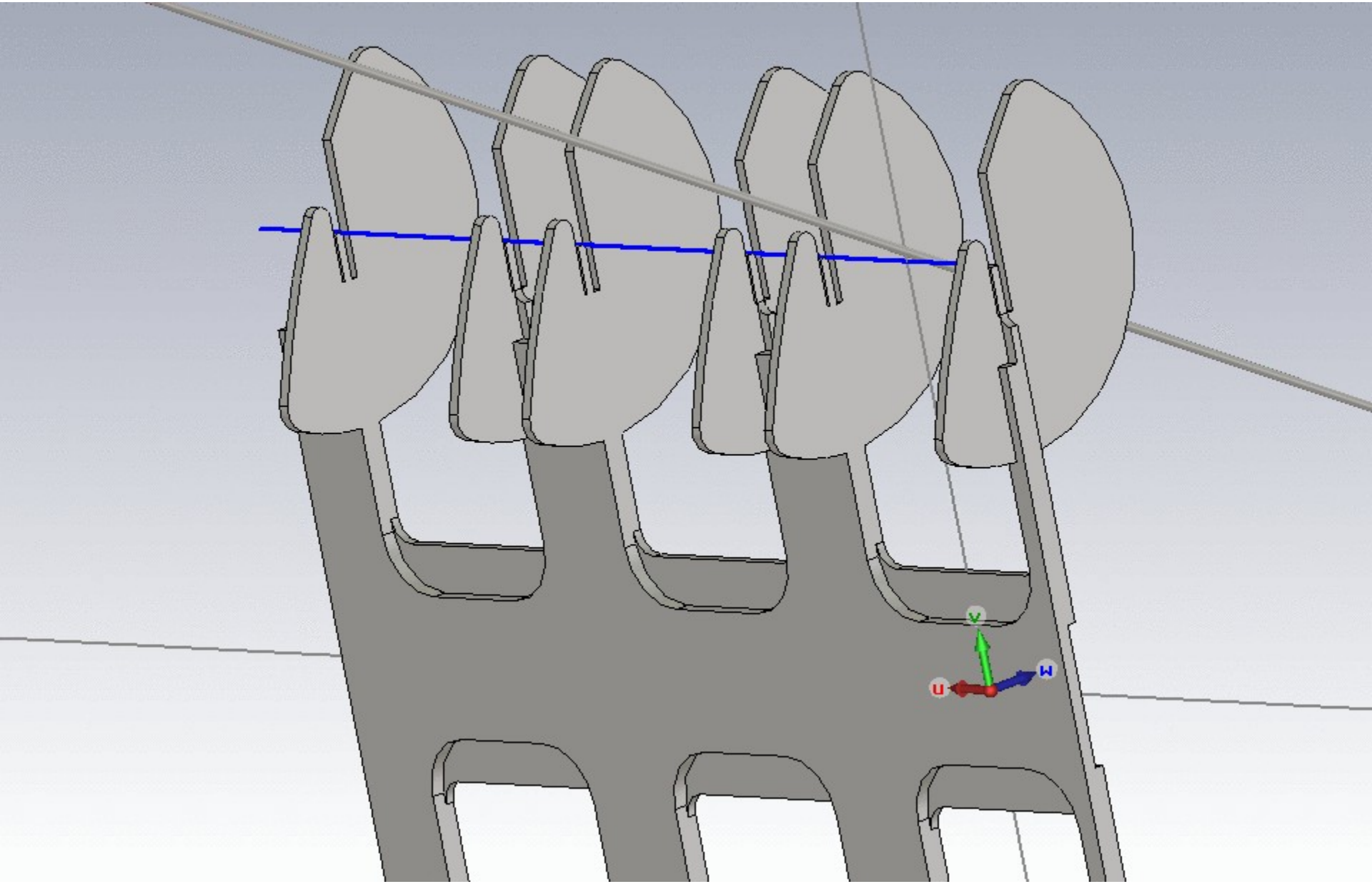
v
u
w

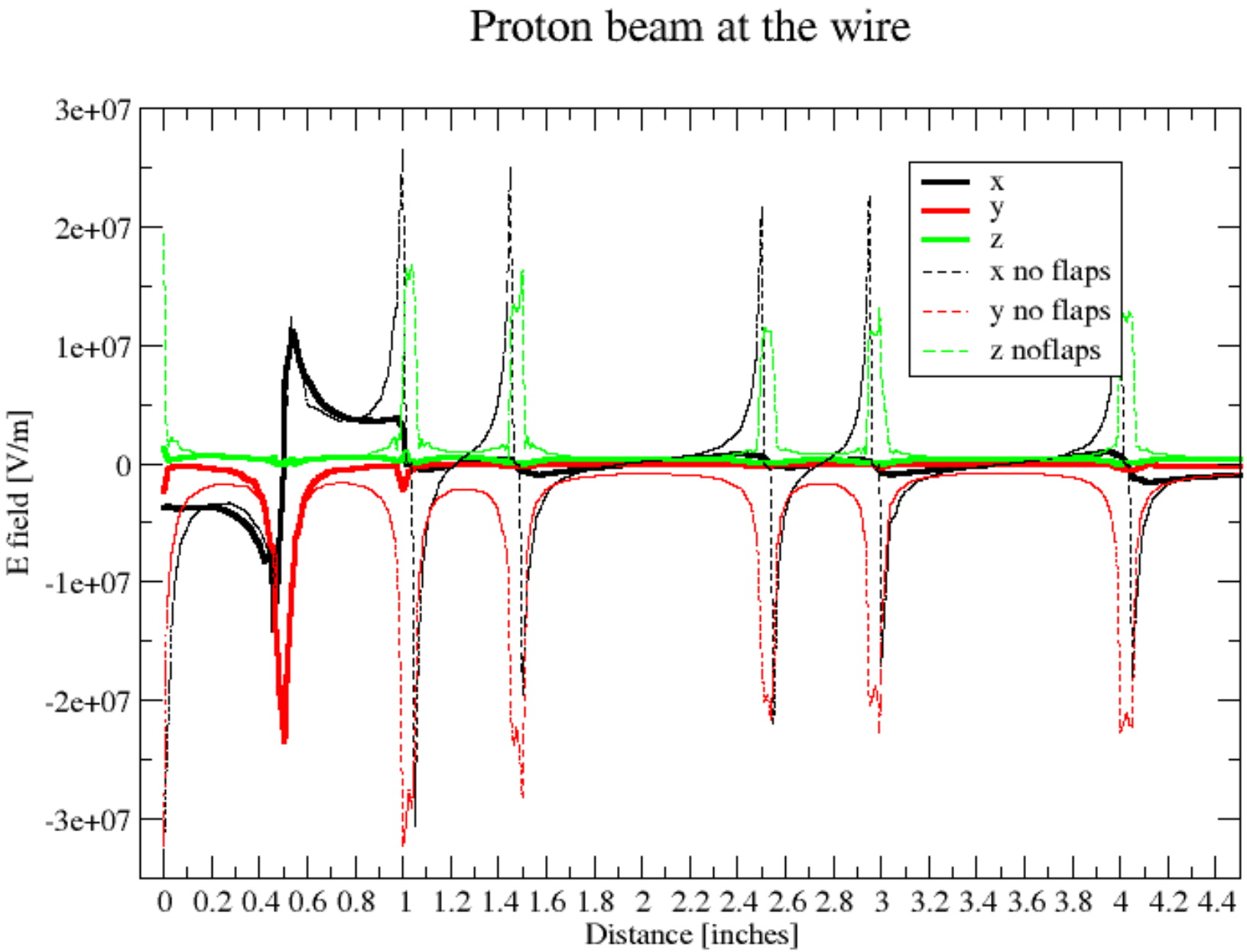
Proton beam at the wire
3e+07
2e+07
1e+07
0
-1e+07
-2e+07
-3e+07
E field [V/m]
0 0.2 0.4 0.6 0.8 1 1.2 1.4 1.6 1.8 2 2.2 2.4 2.6 2.8 3 3.2 3.4 3.6 3.8 4 4.2 4.4
Distance [inches]
x
y
z
x no flaps
y no flaps
z noflaps

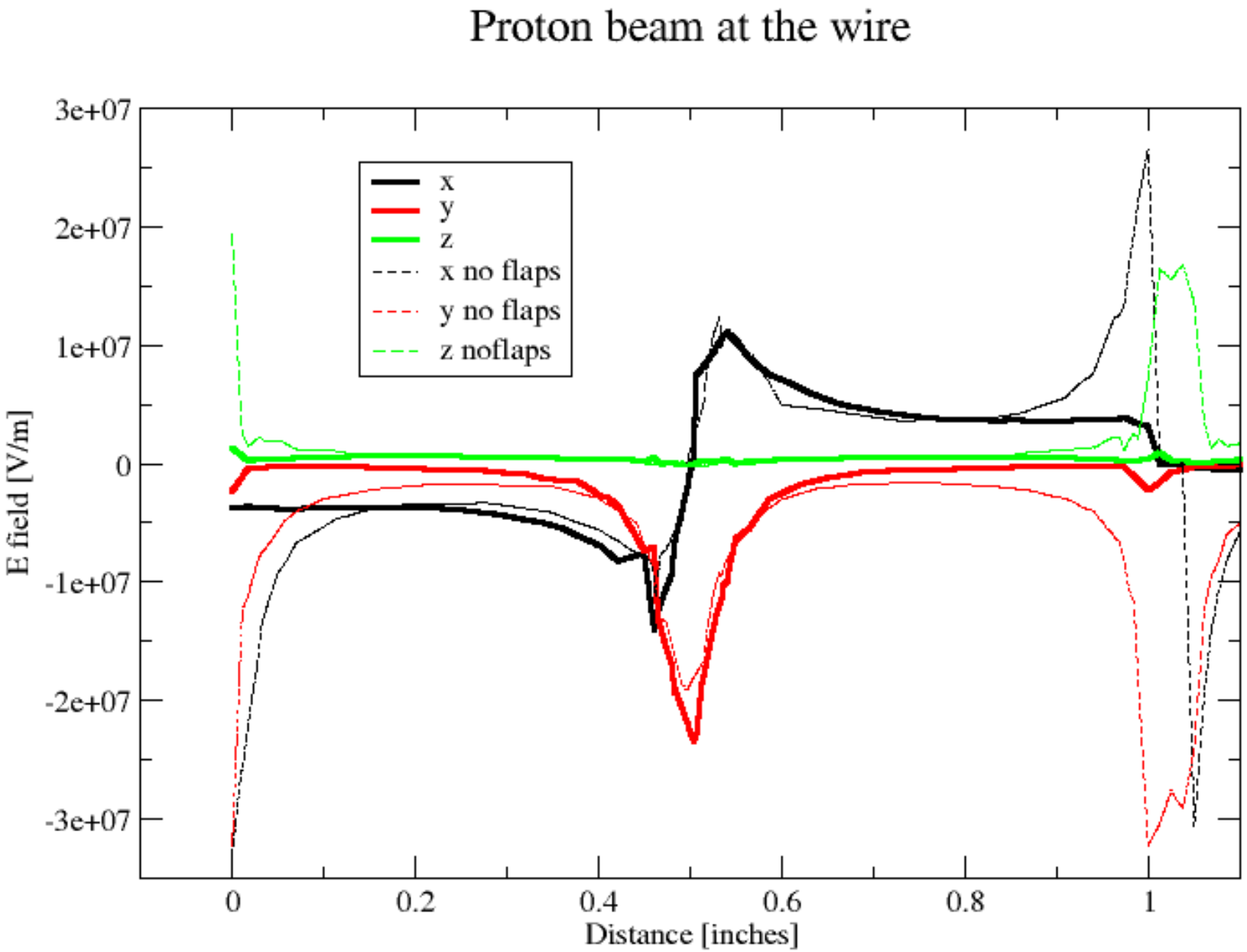
Proton beam at the wire
3e+07
2e+07
1e+07
0
-1e+07
-2e+07
-3e+07
E field [V/m]
0
0.2
0.4
0.6
0.8
1
Distance [inches]
x
y
z
x no flaps
y no flaps
z noflaps

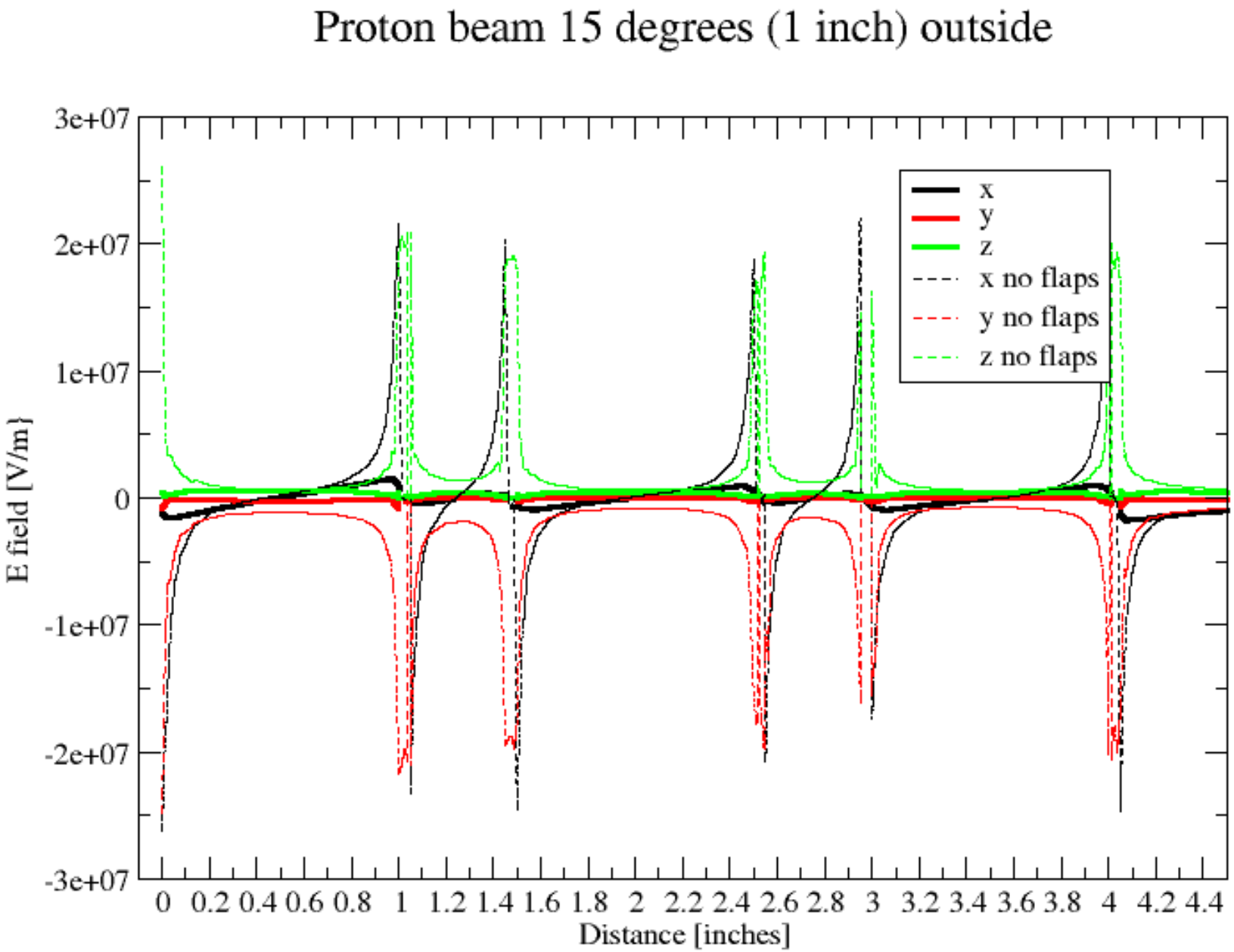
Proton beam 15 degrees (1 inch) outside
3e+07
2e+07
1e+07
0
-1e+07
-2e+07
-3e+07
E field [V/m]
0 0.2 0.4 0.6 0.8 1 1.2 1.4 1.6 1.8 2 2.2 2.4 2.6 2.8 3 3.2 3.4 3.6 3.8 4 4.2 4.4
Distance [inches]
x
y
z
x no flaps
y no flaps
z no flaps

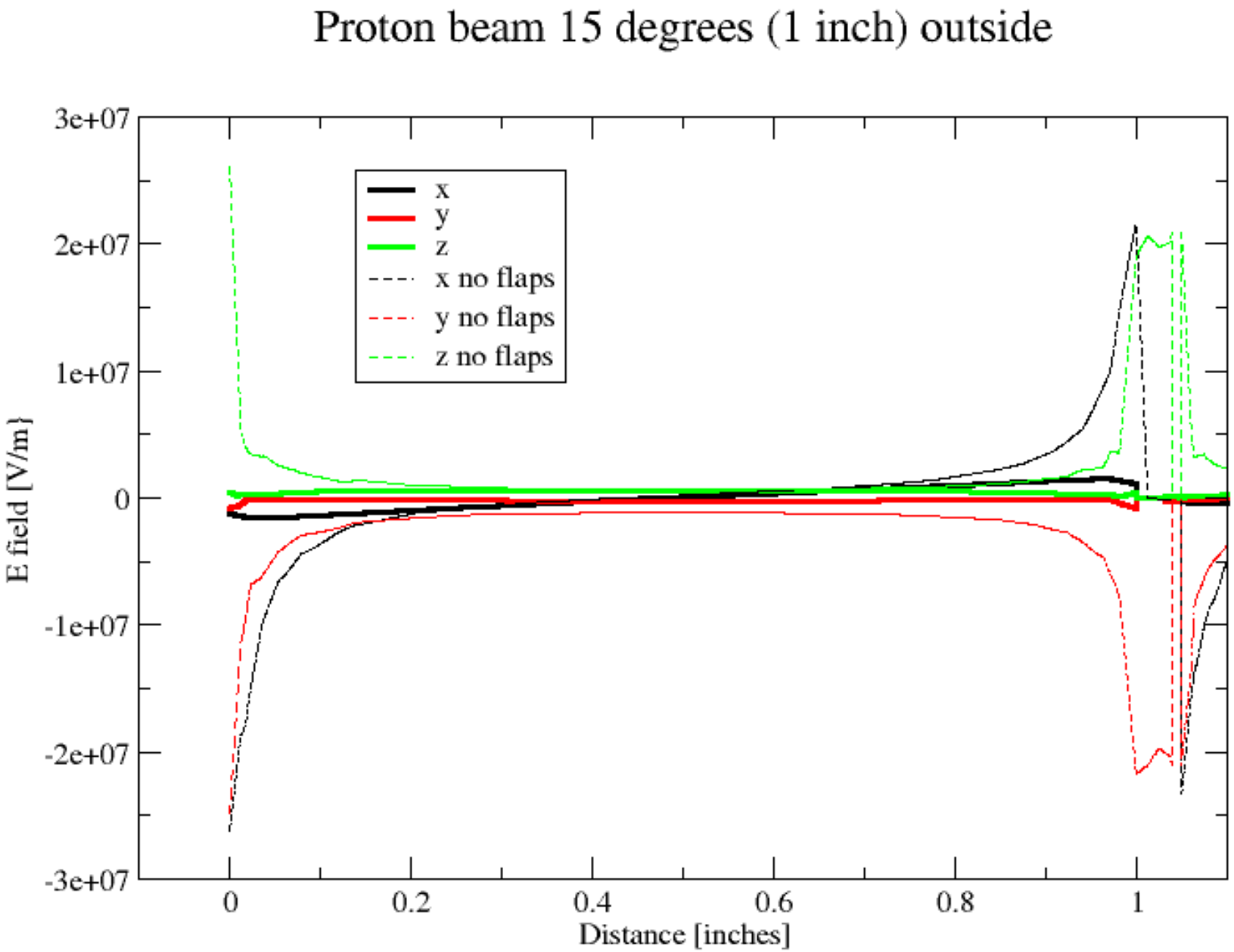
Proton beam 15 degrees (1 inch) outside
3e+07
2e+07
1e+07
0
-1e+07
-2e+07
-3e+07
E field [V/m]
0
0.2
0.4
0.6
0.8
1
Distance [inches]
x
y
z
x no flaps
y no flaps
z no flaps

Proton beam 15 degrees inside

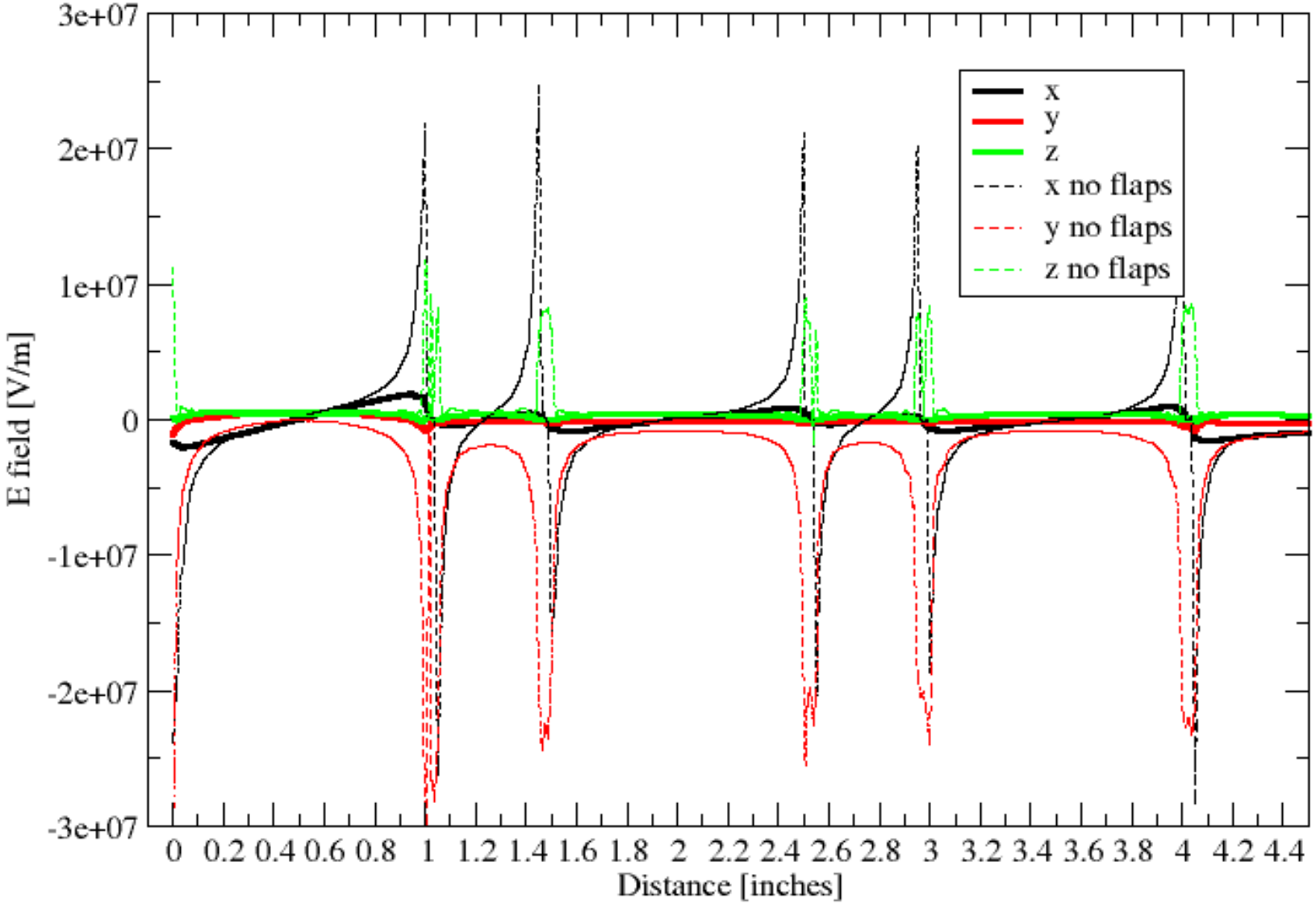

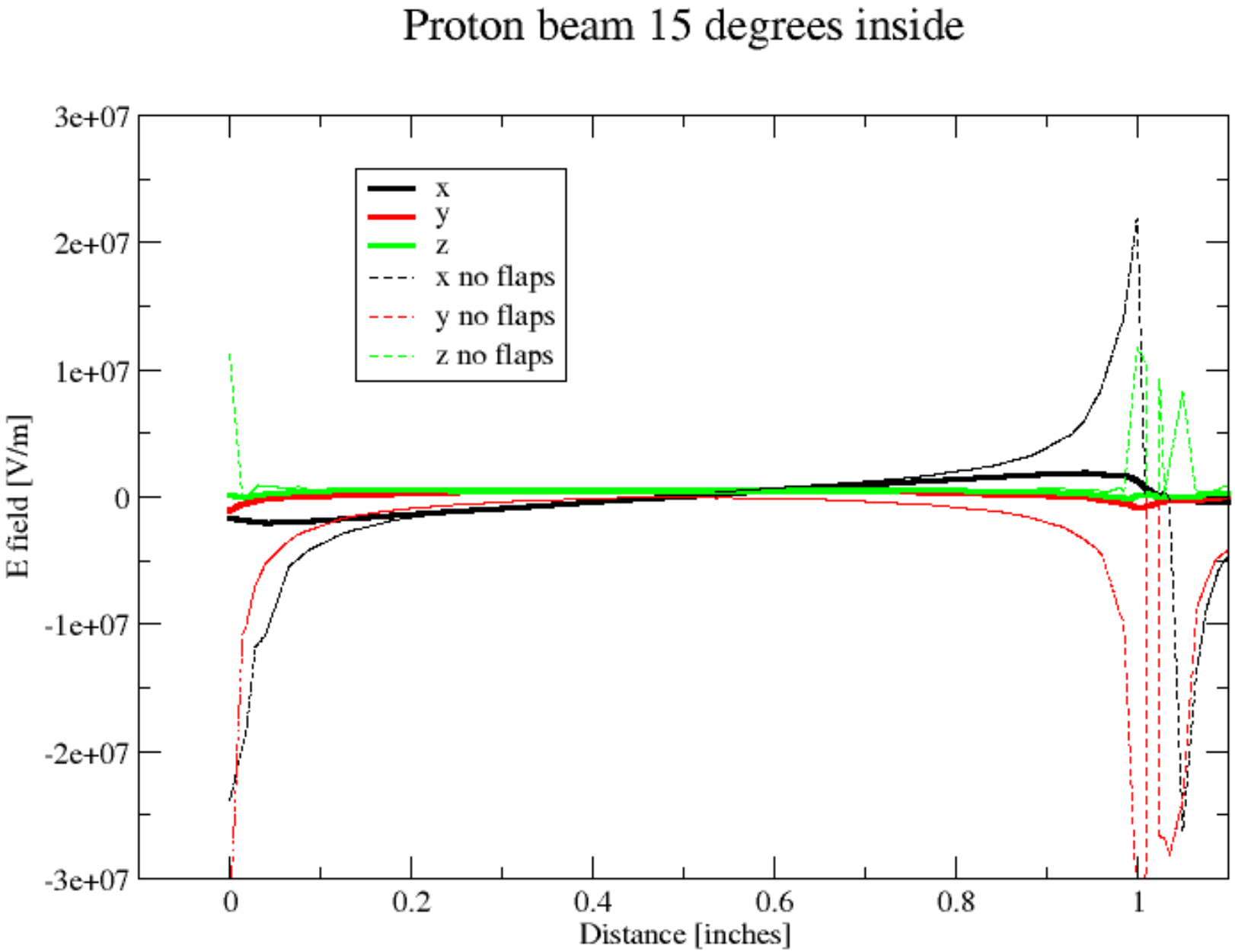
Proton beam 15 degrees inside
3e+07
2e+07
1e+07
0
-1e+07
-2e+07
-3e+07
E field [V/m]
0
0.2
0.4
0.6
0.8
1
Distance [inches]
x
y
z
x no flaps
y no flaps
z no flaps