PC polarimeter UPSTREAM DAQ in the counting house. Racks 1, 2.

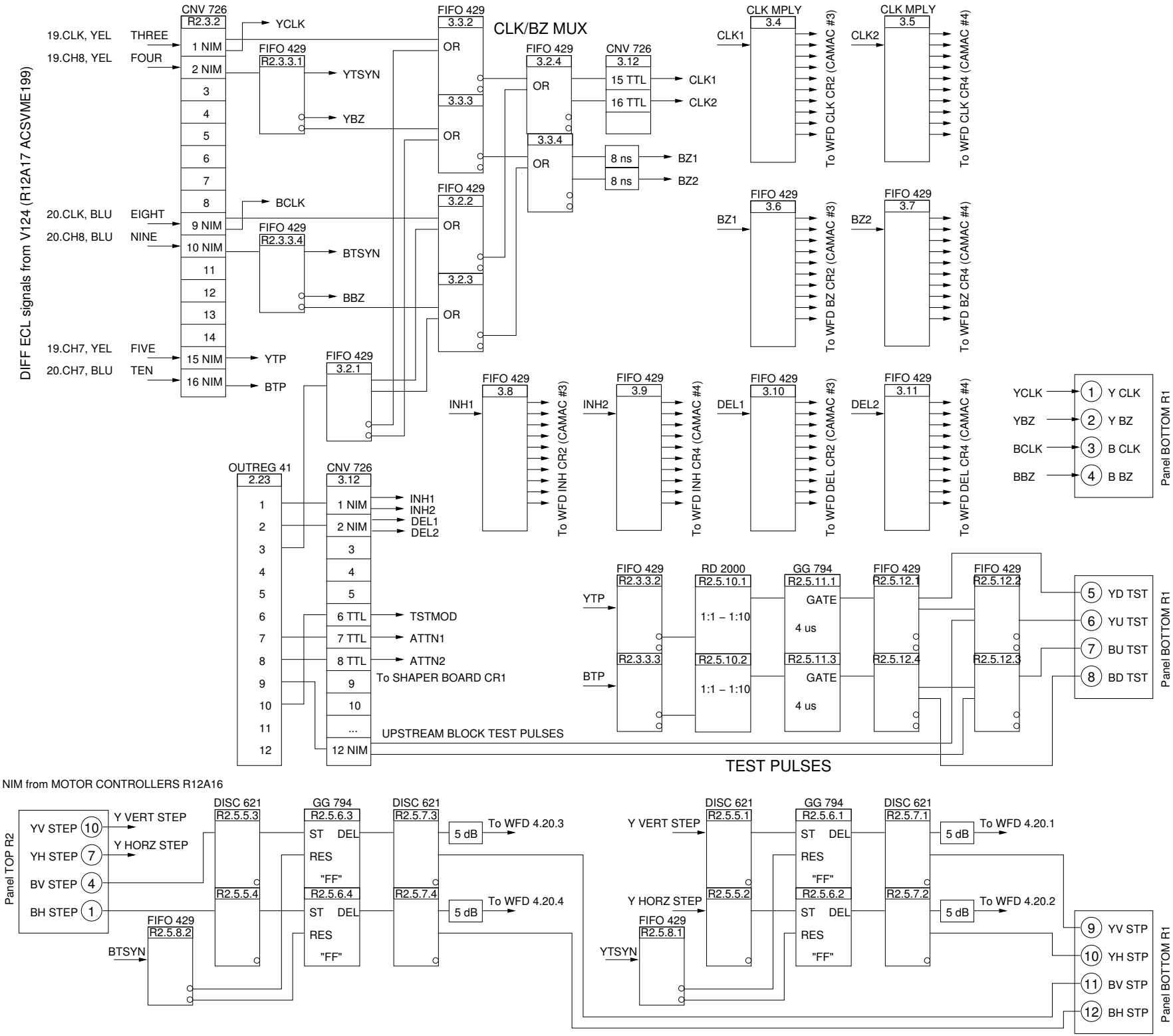

Notation RN.K.L.M means <Rack N>, <Crate K>, <Module L>, <Section M>
If RN is not specified, R1 is assumed